UFⅡ SYSTEM Products Guide Ver.4.4_E

UFⅡ Narrow System

UFⅡ Regular System

UFⅡ Wide System

DIO IMPLANT

DIO

Make your life more abundant,
Make your tomorrow more happier

DIO is leading the digital dentistry with various digital solutions and original implant products.

UFⅡ System Products Guide Ver.4.3_E

Implant Surface Treatment Feature	004
UFⅡ Narrow System	007
UFⅡ Regular System	008
UFⅡ Wide System	009
UFⅡ Master Kit	044
UFⅡ Surgical Kit	045
UFⅡ Narrow Kit	056
UFⅡ Wide Kit	060
Surgical tool management	064

UFⅡ Internal Submerged System

Implant Surface Treatment Feature

Hybrid Type SLA Implant

UFII Implant

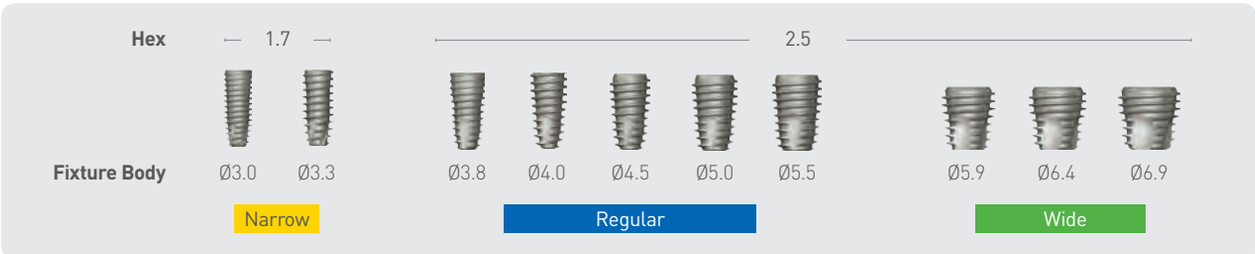

Open Thread

Fixture can be placed with minimal resistance, allowing depth adjustment

Upper Thread

Taper Thread, Initial Fixation

Taper threaded straight body allows effective stress-distribution. Friction can be reduced in the cortical bone with the shallow root depth design going upwards

Straight Body

Minimizes Bone Damage

Fixture length changes based on body length hence, long fixtures allow stable placement in the same level as straight types

Apical Design

Tapered Apical Design

Initial insertion can be executed easily even for weak bone conditions, with the tapered design

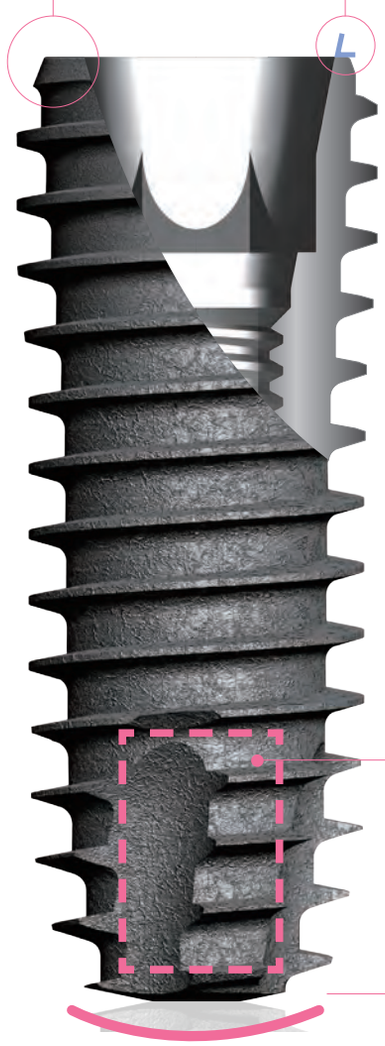

Platform Switching

Platform Switching structure allows stable and safe attachment

Morse Tapered Contact Connection

Provides an excellent level of connectivity and loading distribution of fixture and abutment

Cutting edge

Sharp cutting edge increases self-tapping efficiency

Apex

Rounded apex design minimizes damage to the inferior alveolar nerve and sinus floor

※ This product is a 'medical device' and read and use 'cautions for use' and 'how to use it'.
Review number 2019ET1120105

Hybrid Type SLA Implant

UFII Implant Surface HSA

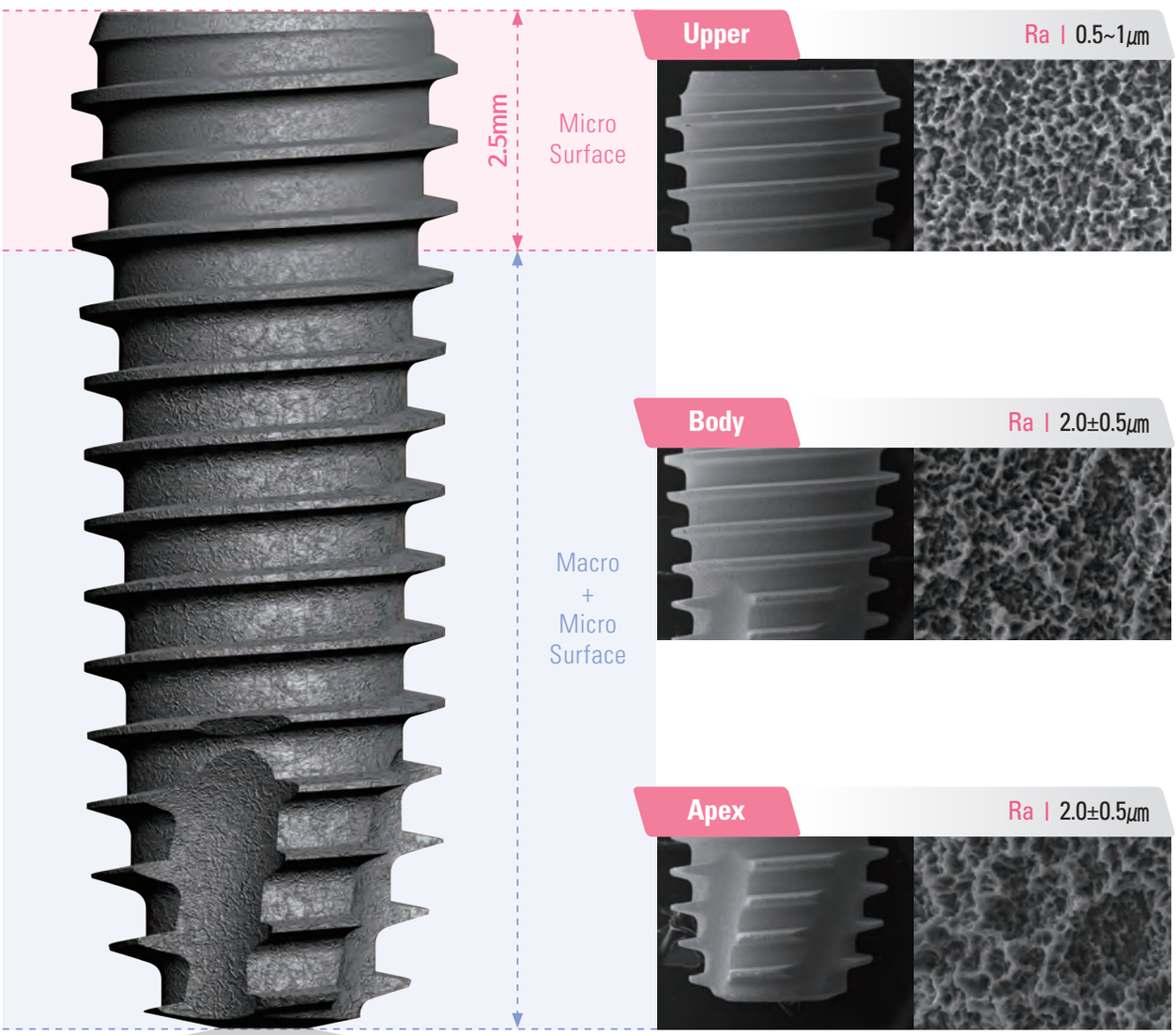

UFⅡ Int. Submerged System

UFⅡ Narrow

D Ø3.0 | Ø3.3
L 8.5 | 10 | 11.5 | 13 | 15

HSA | UV Active

UFⅡ Regular

D Ø3.8 | Ø4.0 | Ø4.5 | Ø5.0 | Ø5.5
L 7 | 8.5 | 10 | 11.5 | 13 | 15 | 16 | 18

HSA | UV Active

UFⅡ Wide

D Ø5.9 | Ø6.4 | Ø6.9
L 7 | 8.5 | 10 | 11.5 | 13 | 15

HSA | UV Active

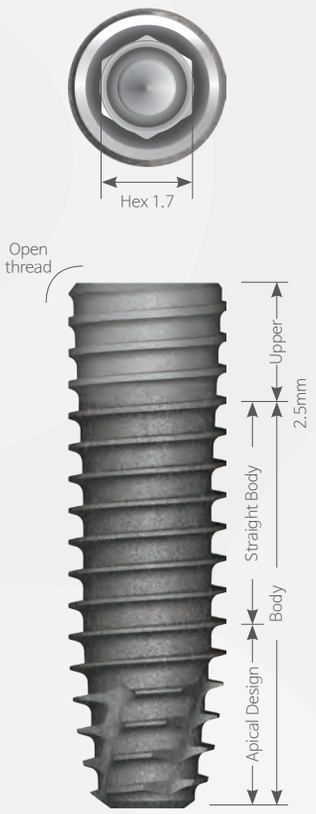

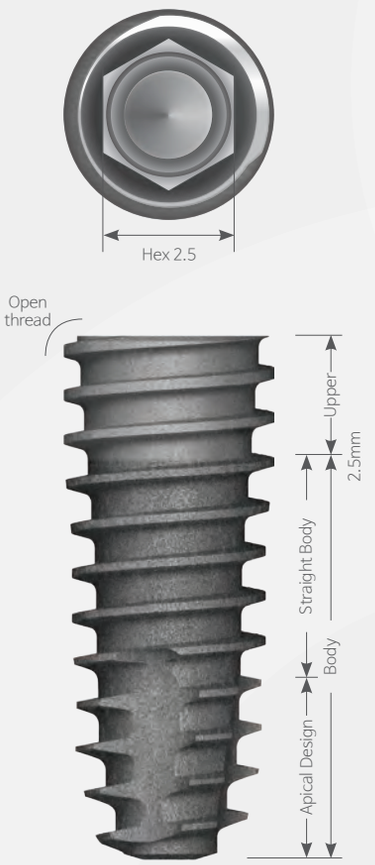

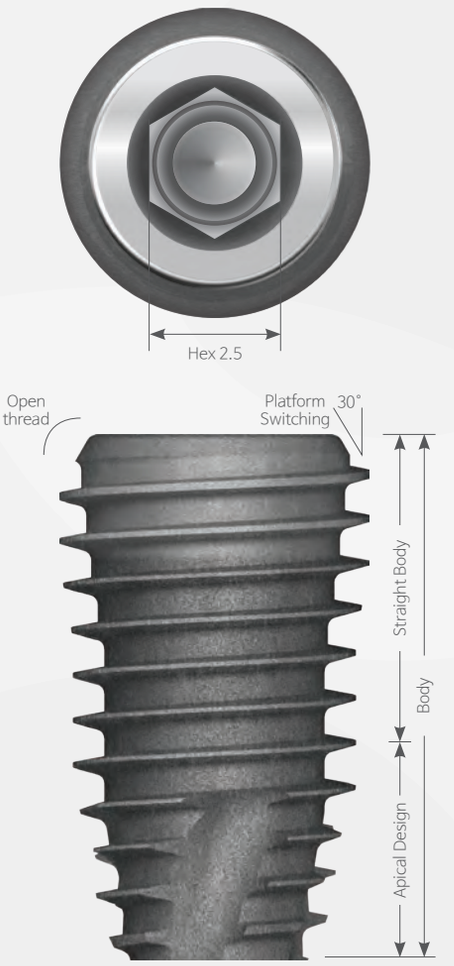

UFⅡ Narrow

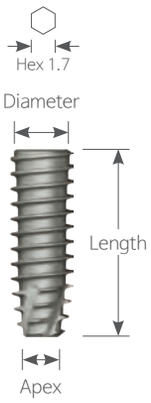

UFⅡ Regular

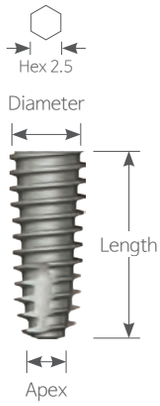

UFⅡ Wide

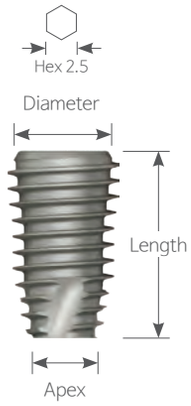

Narrow Fixture

▸ Ø3.0 fixture exclusive for anterior teeth

- HSA / Packing Unit :
  Fixture | Order code : Product Code + SF (ex : UF(Ⅱ)N 3008SF)
  Fixture & Coverscrew | Order code : Product Code + S (ex : UF(Ⅱ)N 3008S)
- UV Active / Packing Unit : Fixture

N D Ø3.0 Hex 1.7 Apex Ø1.6

Unit mm | Scale 1 : 1.2

Length	8.5	10	11.5	13	15
HSA	UF(Ⅱ)N **3008SF**	UF(Ⅱ)N **3010SF**	UF(Ⅱ)N **3011SF**	UF(Ⅱ)N **3013SF**	UF(Ⅱ)N **3015SF**
UV Active	UF(Ⅱ)N **3008UV3**	UF(Ⅱ)N **3010UV3**	UF(Ⅱ)N **3011UV3**	UF(Ⅱ)N **3013UV3**	–

N D Ø3.3 Hex 1.7 Apex Ø1.9

Length	8.5	10	11.5	13	15
HSA	UF(Ⅱ)N **3308SF**	UF(Ⅱ)N **3310SF**	UF(Ⅱ)N **3311SF**	UF(Ⅱ)N **3313SF**	UF(Ⅱ)N **3315SF**
UV Active	UF(Ⅱ)N **3308UV3**	UF(Ⅱ)N **3310UV3**	UF(Ⅱ)N **3311UV3**	UF(Ⅱ)N **3313UV3**	–

Regular Fixture

- HSA / Packing Unit :
  Fixture | Order code : Product Code + SF (ex : UF(II) 3808SF)
  Fixture & Coverscrew | Order code : Product Code + S (ex : UF(II) 3808S)
  Fixture Mount +Mount Screw + Fixture + Cover Screw | Order code : P+Product Code+S (ex : PUF(II) 3808S)
- UV Active / Packing Unit : Fixture

R D Ø3.8 Hex 2.5 Apex Ø2.9

Unit mm I Scale 1 : 1.2

Length	7	8.5	10	11.5	13	15	16	18
HSA	–	UF(II) 3808SF	UF(II) 3810SF	UF(II) 3811SF	UF(II) 3813SF	UF(II) 3815SF	UF(II) 3816SF	UF(II) 3818SF
UV Active	–	UF(II) 3808UV3	UF(II) 3810UV3	UF(II) 3811UV3	UF(II) 3813UV3	–	–	–

R D Ø4.0 Hex 2.5 Apex Ø2.9

Length	7	8.5	10	11.5	13	15	16	18
HSA	–	UF(II) 4008SF	UF(II) 4010SF	UF(II) 4011SF	UF(II) 4013SF	UF(II) 4015SF	UF(II) 4016SF	UF(II) 4018SF
UV Active	–	UF(II) 4008UV3	UF(II) 4010UV3	UF(II) 4011UV3	UF(II) 4013UV3	–	–	–

R D Ø4.5 Hex 2.5 Apex Ø3.4

Length	7	8.5	10	11.5	13	15	16	18
HSA	UF(II) 4507SF	UF(II) 4508SF	UF(II) 4510SF	UF(II) 4511SF	UF(II) 4513SF	UF(II) 4515SF	UF(II) 4516SF	UF(II) 4518SF
UV Active	UF(II) 4507UV3	UF(II) 4508UV3	UF(II) 4510UV3	UF(II) 4511UV3	UF(II) 4513UV3	–	–	–

R D Ø5.0 Hex 2.5 Apex Ø3.9

Length	7	8.5	10	11.5	13	15	16	18
HSA	UF(II) 5007SF	UF(II) 5008SF	UF(II) 5010SF	UF(II) 5011SF	UF(II) 5013SF	UF(II) 5015SF	UF(II) 5016SF	UF(II) 5018SF
UV Active	UF(II) 5007UV3	UF(II) 5008UV3	UF(II) 5010UV3	UF(II) 5011UV3	UF(II) 5013UV3	–	–	–

R D Ø5.5 Hex 2.5 Apex Ø4.5

Length	7	8.5	10	11.5	13	15	16	18
HSA	UF(II) **5507SF**	UF(II) **5508SF**	UF(II) **5510SF**	UF(II) **5511SF**	UF(II) **5513SF**	UF(II) **5515SF**	UF(II) **5516SF**	UF(II) **5518SF**
UV Active	UF(II) **5507UV3**	UF(II) **5508UV3**	UF(II) **5510UV3**	UF(II) **5511UV3**	UF(II) **5513UV3**	-	-	-

Wide Fixture

- HSA / Packing Unit :
  Fixture | Order code : Product Code + SF (ex : UF(II) 6008SF)
  Fixture & Coverscrew | Order code : Product Code + S (ex : UF(II) 6008S)
  Fixture Mount +Mount Screw + Fixture + Cover Screw | Order code : P+Product Code+S (ex : PUF(II) 6008S)
- UV Active / Packing Unit : Fixture

W D Ø5.9 Hex 2.5 Apex Ø5.4

Unit mm | Scale 1 : 1.2

Length	7	8.5	10	11.5	13	15
HSA	UF(II) **6007SF**	UF(II) **6008SF**	UF(II) **6010SF**	UF(II) **6011SF**	UF(II) **6013SF**	UF(II) **6015SF**
UV Active	UF(II) **6007UV3**	UF(II) **6008UV3**	UF(II) **6010UV3**	UF(II) **6011UV3**	-	-

W D Ø6.4 Hex 2.5 Apex Ø5.9

Length	7	8.5	10	11.5	13	15
HSA	UF(II) **6507SF**	UF(II) **6508SF**	UF(II) **6510SF**	UF(II) **6511SF**	UF(II) **6513SF**	UF(II) **6515SF**
UV Active	UF(II) **6507UV3**	UF(II) **6508UV3**	UF(II) **6510UV3**	UF(II) **6511UV3**	-	-

W D Ø6.9 Hex 2.5 Apex Ø6.4

Length	7	8.5	10	11.5	13	15
HSA	UF(II) **7007SF**	UF(II) **7008SF**	UF(II) **7010SF**	UF(II) **7011SF**	UF(II) **7013SF**	UF(II) **7015SF**

Cover Screw

▸Used for narrow area after the Implant surgery or to protect Implant connection area.
▸Dental Implant cover screw is implanted into the top
which helps to prevent tissue and bone to grow inside the implant.

· Uses 1.2 Hex Driver
· Method of use
① Screw installation after removing the remaining blood or foreign substance in Implant.
② Connect the screw using 1.2 hex driver and hand-tighten (5~8Ncm)
③ Remove the screw if cold-welding occurs between the screw and implant.
· Tightening Torque : 5~8Ncm

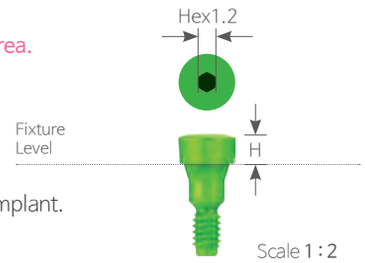

N R W Hex 1.2

Unit mm I Scale 1 : 1.25

Fixture Size	Narrow	Regular · Wide	
Height 0	UNSCS **2700**	SSCS **3400**	-
1	UNSCS **2710**	-	SSCS **3410**
2	UNSCS **2720**	-	SSCS **3420**
3	UNSCS **2730**	-	SSCS **3430**

Bone Forming Cover Screw

▸The Bone Forming Cover Screw is then used to cover the bongraft to protect it from your tongue and saliva.
▸Make a buccal incision (instead of a midcrestal incision) for better access to keratinized mucosa.

· The concave transmucosal profile make soft tissue can be thicker and more stable.
· 2-piece type can be used depending on implant placement and distance from adjacent teeth.

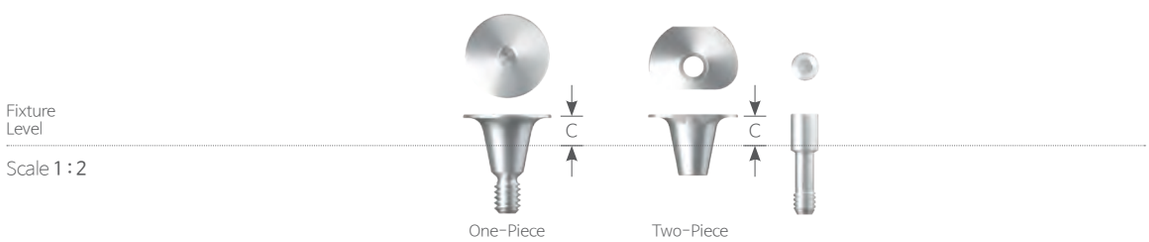

R

Unit mm I Scale 1 : 1.25

Fixture Size	Regular			
Type	One - Piece		Two - Piece	
Cuff 1.5	BFC **6565S**	BFC **8080S**	BFC **7060S**	BFC **8055S**
3	BFC **6565L**	BFC **8080L**	BFC **7060L**	BFC **8055L**

Healing Abutment

· Uses 1.2 Hex Driver
· Uses 0.5 Slot Driver
· Tightening Torque : 5~8Ncm

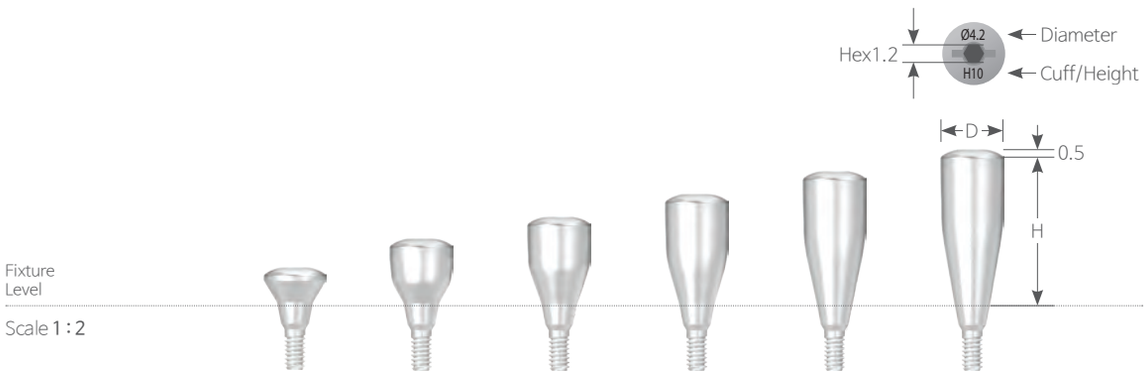

N Hex 1.2

Unit mm I Scale 1 : 1.25

Fixture Size	Narrow			
	Ø4.1	Ø4.2	Ø4.6	Ø4.7
Height 2	UNSHA **4020**	-	UNSHA **4520**	-
4	-	UNSHA **4024**	-	UNSHA **4524**
5	-	UNSHA **4035**	-	UNSHA **4535**
7	-	UNSHA **4047**	-	UNSHA **4547**
8.5	-	UNSHA **4058**	-	UNSHA **4558**
10	-	UNSHA **4060**	-	UNSHA **4560**

Healing Abutment

▸Used for small diameter abutment like Ball abutment
▸Used if the fixture is deeply placed
· Uses 1.2 Hex Driver
· Uses 0.5 Slot Driver
· Tightening Torque : 5~8Ncm

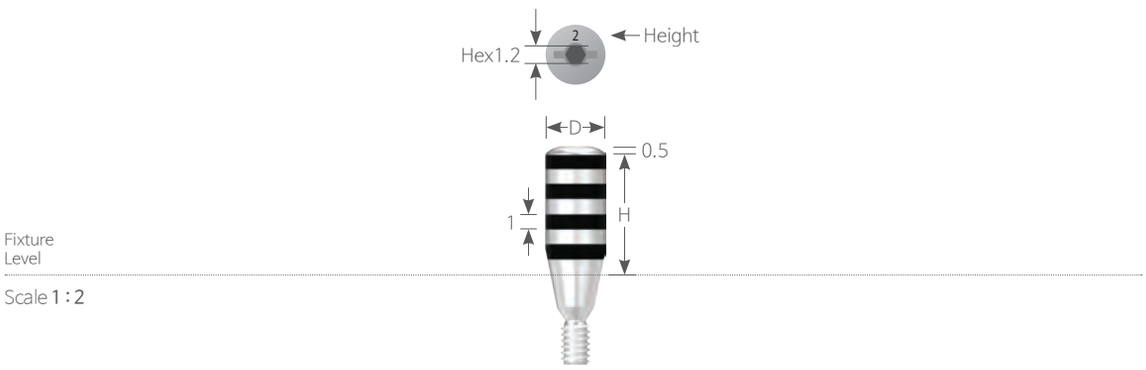

R W D Ø4.0 Hex 1.2

Unit mm I Scale 1 : 1.25

Fixture Size	Regular · Wide			
Heigth	2	4	6	8
	SSHA **4020**	SSHA **4040**	SSHA **4060**	SSHA **4080**

· Uses 1.2 Hex Driver
· Uses 0.5 Slot Driver
· Tightening Torque : 5~8Ncm

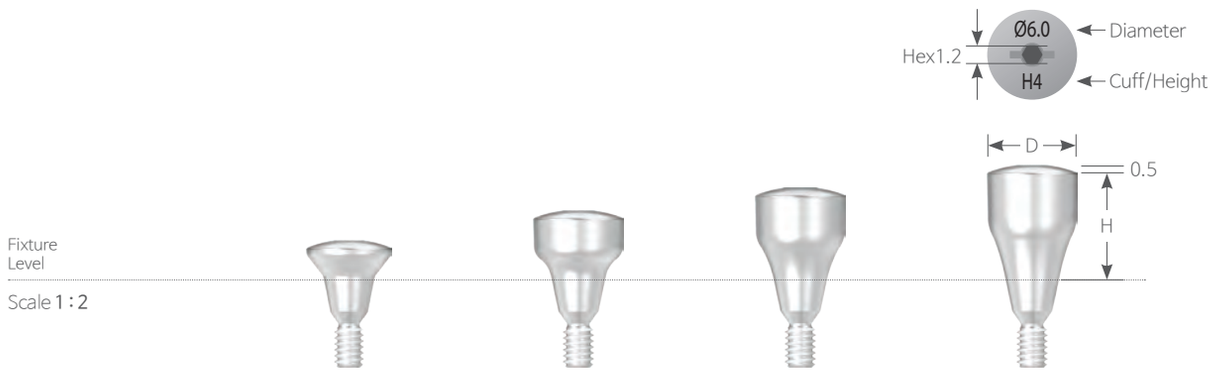

R W Hex 1.2

Unit mm I Scale 1 : 1.25

Fixture Size	Regular · Wide			
	Ø4.6	Ø5.6	Ø6.6	Ø7.6
Height 2	SSHA **4520**	SSHA **5520**	SSHA **6520**	SSHA **7520**
4	SSHA **4524**	SSHA **5524**	SSHA **6524**	SSHA **7524**
5.5	SSHA **4535**	SSHA **5535**	SSHA **6535**	SSHA **7535**
7	SSHA **4547**	SSHA **5547**	SSHA **6547**	SSHA **7547**

Healing Abutment

▸The healing abutments are designed to help gum tissue around the implant site heal faster.
▸Used for making designated shape of gingiva.

· Caution
① Connect the screw using 1.2 hex driver and hand-tighten (5~8Ncm)
② Organized by diameter and height, the healing abutments can be selected according to the needs and requirements of a particular clinical case.
- Use larger healing abutment than an abutment in order to maintain balance between the gum and final prosthesis without gum interference while abutment is being settled.
※ When connecting the cover screw and healing abutment, the screw can be separated easily by applying antibiotics functioning as lubricant. (Antibiotics: Minocline, Periocline, etc.)

· Uses 1.2 Hex Driver
· Uses 0.5 Slot Driver
· Tightening Torque : 5~8Ncm

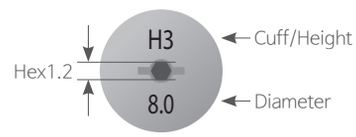

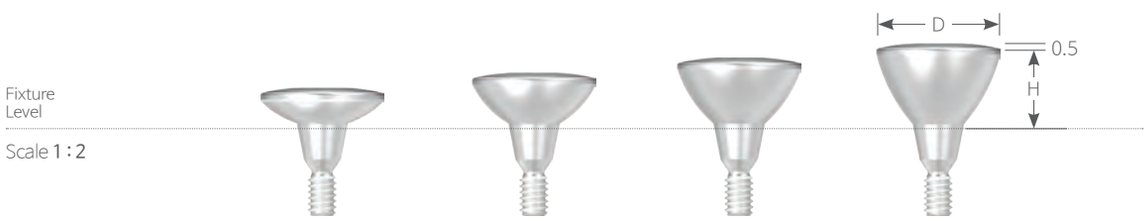

R W Hex 1.2

Unit mm | Scale 1 : 1.25

Fixture Size	Regular · Wide	
Height 2	SSHA **8212**	SSHA **9212**
3	SSHA **8223**	SSHA **9223**
4	SSHA **8234**	SSHA **9234**
5	SSHA **8245**	SSHA **9245**

Cement / Screw - Retained Restorations

Temporary / Cemented / Anlged / UCLA Abutment

Fixture - N R W

Abutment Screw

Temporary Abutment
019P

Cemented Abutment
020P

Angled Abutment
023P

UCLA CCM Abutment
024P

Fixture Analog
019P

Pick-up Impression Coping
017P

Transfer Impression Coping
018P

UFII Narrow
007P

UFII Regular
008P

UFII Wide
009P

Cover Screw
010P

Healing Abutment
011P

Cement / Screw - Retained Restorations

Mill / UCLA Abutment

Fixture - R W

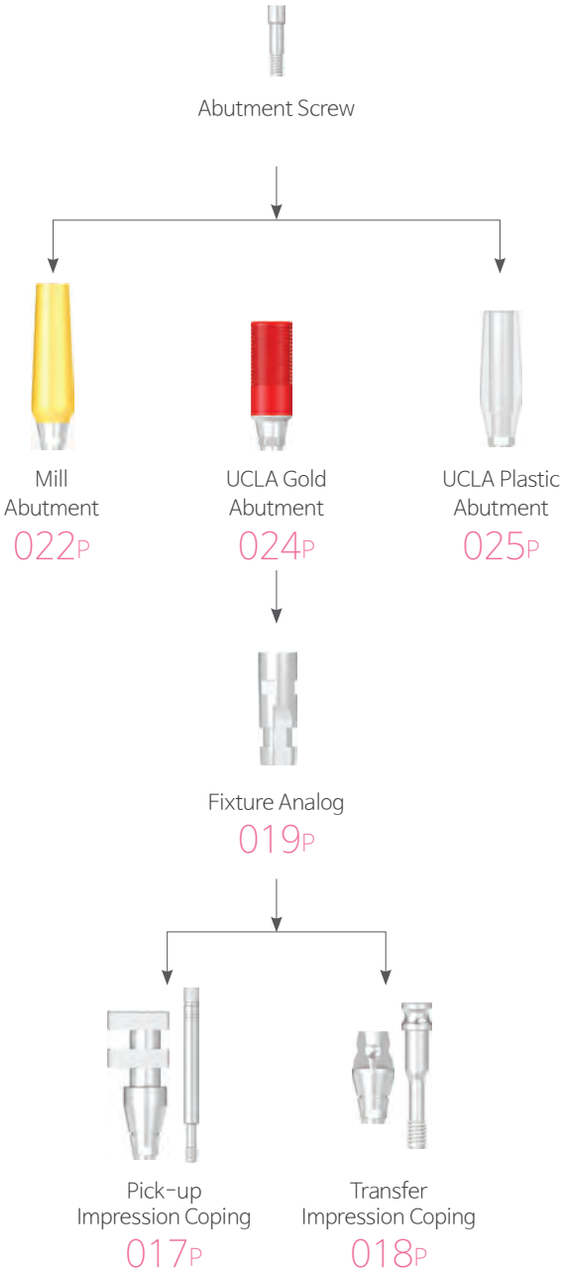

Abutment Components

Pick-up Impression Coping Hex Non-Hex

▸Custom tray is used for pick-up type of impression taking.

· Uses 1.2 Hex Driver

· Packing Unit : Pick-up Impression Coping + Guide Pin

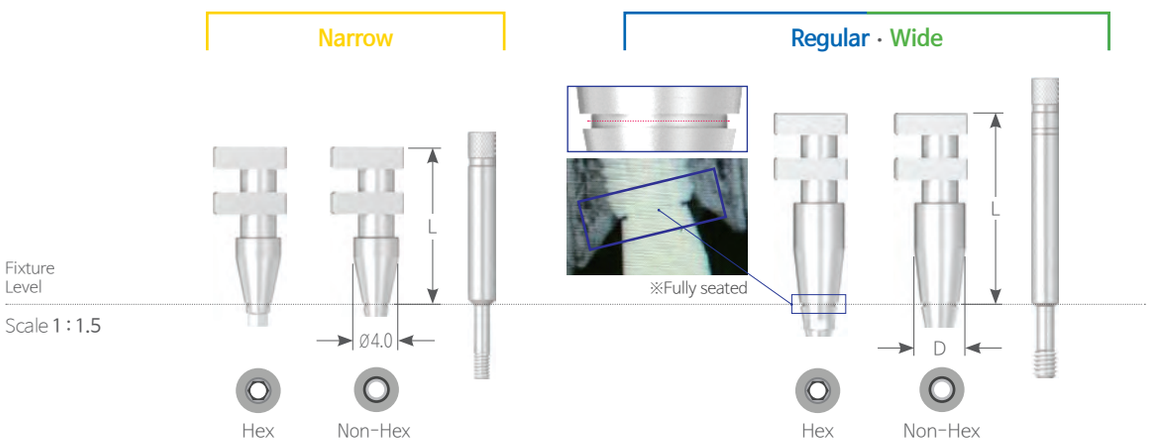

N R W Hex

Unit mm

Fixture Size	Narrow		Regular · Wide				
Diameter	ø4.0	Guide Pin	ø4.0	ø4.5	ø5.5	ø6.5	Guide Pin
Length 09	-	-	SSPI 4009H	SSPI 4509H	SSPI 5509H	SSPI 6509H	SSG 2021
12	UNSPI 4012H	UNSSG 1422	-	-	-	-	-
13	-	-	SSPI 4013H	SSPI 4513H	SSPI 5513H	SSPI 6513H	SSG 2026
14	UNSPI 4014H	UNSSG 1422	-	-	-	-	-
16	UNSPI 4016H	UNSSG 1425	-	-	-	-	-
17	-	-	SSPI 4017H	SSPI 4517H	SSPI 5517H	SSPI 6517H	SSG 2329
19	-	-	SSPI 4019H	SSPI 4519H	SSPI 5519H	SSPI 6519H	SSG 2329

N R W Non-Hex

Unit mm

Fixture Size	Narrow		Regular · Wide				
Diameter	ø4.0	Guide Pin	ø4.0	ø4.5	ø5.5	ø6.5	Guide Pin
Length 09	-	-	SSPI 4009N	SSPI 4509N	SSPI 5509N	SSPI 6509N	SSG 2021
12	UNSPI 4012N	UNSSG 1422	-	-	-	-	-
13	-	-	SSPI 4013N	SSPI 4513N	SSPI 5513N	SSPI 6513N	SSG 2026
14	UNSPI 4014N	UNSSG 1422	-	-	-	-	-
16	UNSPI 4016N	UNSSG 1425	-	-	-	-	-
17	-	-	SSPI 4017N	SSPI 4517N	SSPI 5517N	SSPI 6517N	SSG 2329
19	-	-	SSPI 4019N	SSPI 4519N	SSPI 5519N	SSPI 6519N	SSG 2329

Abutment Components

Transfer Impression Coping Hex Non-Hex

▸Ready-made tray is used for transfer type of impression taking.

· Double sided structure increases quality.
· Uses 1.2 Hex Driver
· Hex type is two-piece structure and Non-Hex type is one-piece structure.
· Packing Unit : Transfer Impression Coping + Guide Pin (Hex)
Transfer Impression Coping (Non-Hex)

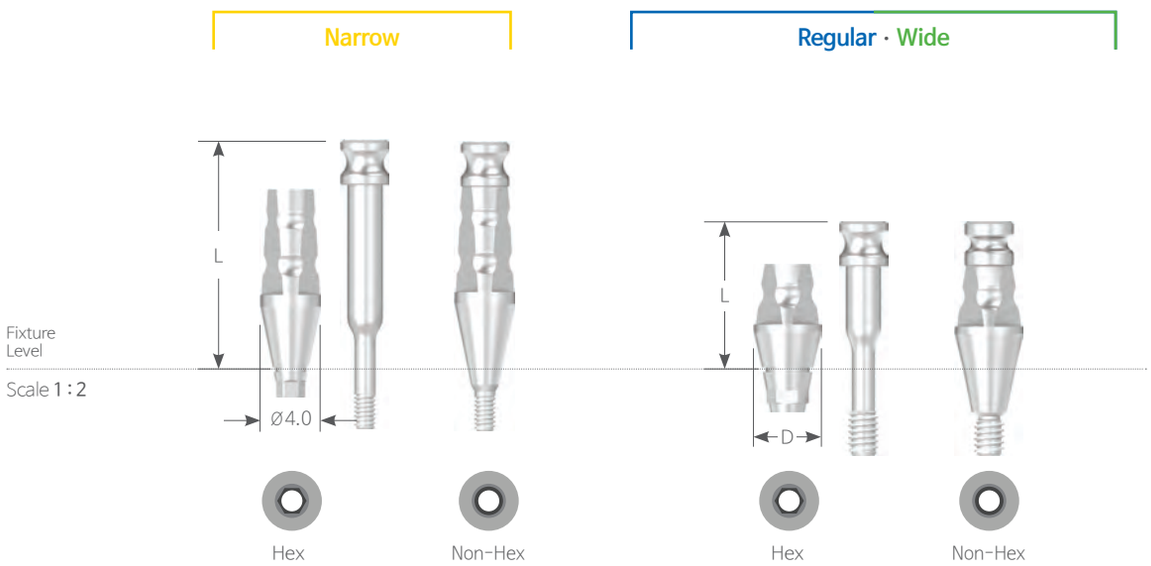

N R W Hex

Unit mm

Fixture Size	Narrow		Regular · Wide					
Diameter	Ø4.0	Guide Pin	Ø4.0	Ø4.5	Screw	Ø5.5	Ø6.5	Guide Pin
Length 10	-	-	SSTI 4010H	SSTI 4510H	SSTI 4015S	SSTI 5510H	SSTI 6510H	SSTI 6515S
13	UNSTI 4013H	UNSTI 4013S	-	-	-	-	-	-
15	UNSTI 4015H	UNSTI 4015S	SSTI 4015H	SSTI 4515H	SSTI 4020S	SSTI 5515H	SSTI 6515H	SSTI 6520S
17	UNSTI 4017H	UNSTI 4017S	-	-	-	-	-	-

N R W Non-Hex

Unit mm

Fixture Size	Narrow	Regular · Wide			
Diameter	Ø4.0	Ø4.0	Ø4.5	Ø5.5	Ø6.5
Length 10	-	SSTI 4010N	SSTI 4510N	SSTI 5510N	SSTI 6510N
13	UNSTI 4013N	-	-	-	-
15	UNSTI 4015N	SSTI 4015N	SSTI 4515N	SSTI 5515N	SSTI 6515N
17	UNSTI 4017N	-	-	-	-

Fixture Analog

▸Providing anchor point for fabricating implant prosthetics on working model.
※ Non-medical devices

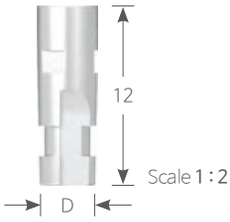

N R W Length 12

Unit mm I Scale 1 : 1.25

Fixture Size	Narrow	Regular · Wide
Diameter	Ø3.0	Ø4.0

UNSFA **3012**

SSFA **4012**

Temporary Abutment Hex Non-Hex

▸Used when temporary prosthesis is made
· Hex / Non-Hex type
· Uses 1.2 Hex Driver
· Packing Unit : Abutment + Abutment Screw
· Tightening Torque : N 20Ncm, R W 30~35Ncm

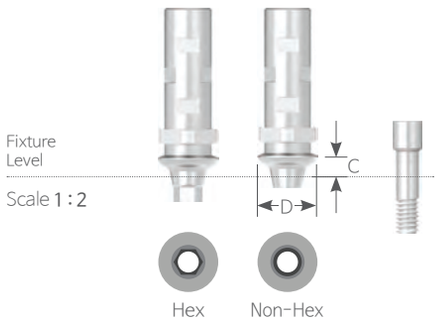

N R W

Unit mm I Scale 1 : 1.25

Fixture Size	Narrow		Regular · Wide	
Diameter	Ø4.0		Ø4.5	
Type	Hex	Non-Hex	Hex	Non-Hex
Cuff 1	UNSTA **4010H**	UNSTA **4010N**	SSTA **4510H [H]**	SSTA **4510N [H]**
3	UNSTA **4030H**	UNSTA **4030N**	SSTA **4530H [H]**	SSTA **4530N [H]**
Abut. Screw	UNSAS **1407H**	UNSAS **1407H**	SSC **2008H**	SSC **2008H**

Cemented Abutment Hex Non-Hex

▸For cement retained prosthesis
· Gold colored gingival area for esthetic purpose
· Hex / Non-Hex type
· To prevent rotation of prosthesis, it has flap section
· Uses 1.2 Hex Driver
· Compatible with Solid Abutment Impression Cap
· Packing Unit : Abutment + Abutment Screw
· Tightening Torque : N 20Ncm, R W 30~35Ncm

N R W Hex

Unit mm I Scale 1 : 1.25

Fixture Size	Narrow	Regular · Wide			
Diameter	Ø4.0	Ø4.5	Ø5.5	Ø6.5	Ø7.5
Length 4					
Cuff 1	-	SSCA 45104H(II)[H]	SSCA 55104H(II)[H]	SSCA 65104H(II)[H]	SSCA 75104H(II)[H]
2	-	SSCA 45204H(II)[H]	SSCA 55204H(II)[H]	SSCA 65204H(II)[H]	SSCA 75204H(II)[H]
3	-	SSCA 45304H(II)[H]	SSCA 55304H(II)[H]	SSCA 65304H(II)[H]	SSCA 75304H(II)[H]
4	-	SSCA 45404H(II)[H]	SSCA 55404H(II)[H]	SSCA 65404H(II)[H]	SSCA 75404H(II)[H]
5	-	SSCA 45504H(II)[H]	SSCA 55504H(II)[H]	SSCA 65504H(II)[H]	SSCA 75504H(II)[H]
Screw	-	SSC 2008SH	SSC 2008H	SSC 2008H	SSC 2008H
Length 5.5					
Cuff 1	UNSCA 40105H	SSCA 45105H(II)[H]	SSCA 55105H(II)[H]	SSCA 65105H(II)[H]	SSCA 75105H(II)[H]
2	UNSCA 40205H	SSCA 45205H(II)[H]	SSCA 55205H(II)[H]	SSCA 65205H(II)[H]	SSCA 75205H(II)[H]
3	UNSCA 40305H	SSCA 45305H(II)[H]	SSCA 55305H(II)[H]	SSCA 65305H(II)[H]	SSCA 75305H(II)[H]
4	UNSCA 40405H	SSCA 45405H(II)[H]	SSCA 55405H(II)[H]	SSCA 65405H(II)[H]	SSCA 75405H(II)[H]
5	UNSCA 40505H	SSCA 45505H(II)[H]	SSCA 55505H(II)[H]	SSCA 65505H(II)[H]	SSCA 75505H(II)[H]
6	UNSCA 40605H	-	-	-	-
7	UNSCA 40705H	-	-	-	-
Screw	UNSAS 1407H	SSC 2008SH	SSC 2008H	SSC 2008H	SSC 2008H
Length 7					
Cuff 1	UNSCA 40107H	SSCA 45107H(II)[H]	SSCA 55107H(II)[H]	SSCA 65107H(II)[H]	SSCA 75107H(II)[H]
2	UNSCA 40207H	SSCA 45207H(II)[H]	SSCA 55207H(II)[H]	SSCA 65207H(II)[H]	SSCA 75207H(II)[H]
3	UNSCA 40307H	SSCA 45307H(II)[H]	SSCA 55307H(II)[H]	SSCA 65307H(II)[H]	SSCA 75307H(II)[H]
4	UNSCA 40407H	SSCA 45407H(II)[H]	SSCA 55407H(II)[H]	SSCA 65407H(II)[H]	SSCA 75407H(II)[H]
5	UNSCA 40507H	SSCA 45507H(II)[H]	SSCA 55507H(II)[H]	SSCA 65507H(II)[H]	SSCA 75507H(II)[H]
6	UNSCA 40607H	-	-	-	-
7	UNSCA 40707H	-	-	-	-
Screw	UNSAS 1407H	SSC 2008SH	SSC 2008H	SSC 2008H	SSC 2008H

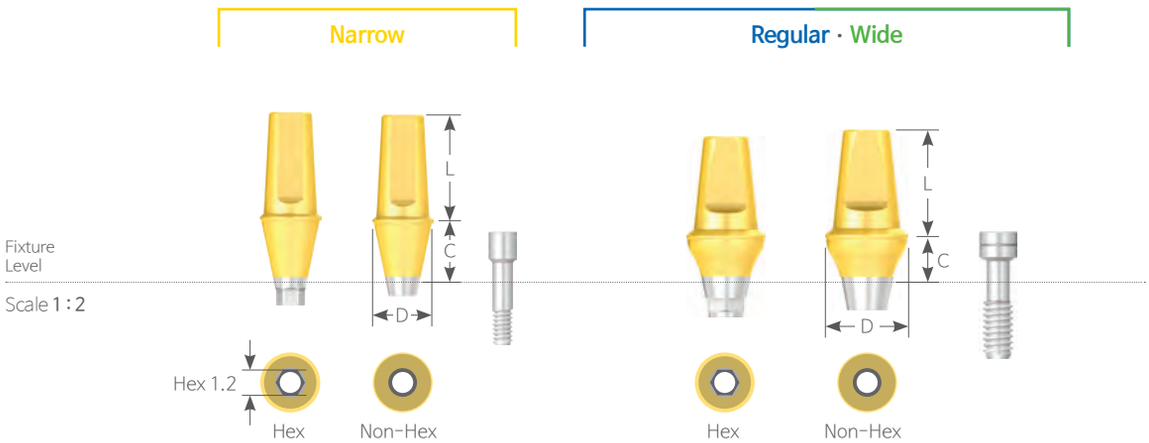

N R W Non-Hex

Unit mm | Scale 1 : 1.25

Fixture Size	Narrow	Regular · Wide			
Diameter	Ø4.0	Ø4.5	Ø5.5	Ø6.5	Ø7.5

Length 4

Cuff 1	–	SSCA 45104N (II)[H]	SSCA 55104N (II)[H]	SSCA 65104N (II)[H]	SSCA 75104N (II)[H]
2	–	SSCA 45204N (II)[H]	SSCA 55204N (II)[H]	SSCA 65204N (II)[H]	SSCA 75204N (II)[H]
3	–	SSCA 45304N (II)[H]	SSCA 55304N (II)[H]	SSCA 65304N (II)[H]	SSCA 75304N (II)[H]
4	–	SSCA 45404N (II)[H]	SSCA 55404N (II)[H]	SSCA 65404N (II)[H]	SSCA 75404N (II)[H]
5	–	SSCA 45504N (II)[H]	SSCA 55504N (II)[H]	SSCA 65504N (II)[H]	SSCA 75504N (II)[H]
Screw	–	SSC 2008SH	SSC 2008H	SSC 2008H	SSC 2008H

Length 5.5

Cuff 1	UNSCA 40105N	SSCA 45105N (II)[H]	SSCA 55105N (II)[H]	SSCA 65105N (II)[H]	SSCA 75105N (II)[H]
2	UNSCA 40205N	SSCA 45205N (II)[H]	SSCA 55205N (II)[H]	SSCA 65205N (II)[H]	SSCA 75205N (II)[H]
3	UNSCA 40305N	SSCA 45305N (II)[H]	SSCA 55305N (II)[H]	SSCA 65305N (II)[H]	SSCA 75305N (II)[H]
4	UNSCA 40405N	SSCA 45405N (II)[H]	SSCA 55405N (II)[H]	SSCA 65405N (II)[H]	SSCA 75405N (II)[H]
5	UNSCA 40505N	SSCA 45505N (II)[H]	SSCA 55505N (II)[H]	SSCA 65505N (II)[H]	SSCA 75505N (II)[H]
6	UNSCA 40605N	–	–	–	–
7	UNSCA 40705N	–	–	–	–
Screw	UNSAS 1407H	SSC 2008SH	SSC 2008H	SSC 2008H	SSC 2008H

Length 7

Cuff 1	UNSCA 40107N	SSCA 45107N (II)[H]	SSCA 55107N (II)[H]	SSCA 65107N (II)[H]	SSCA 75107N (II)[H]
2	UNSCA 40207N	SSCA 45207N (II)[H]	SSCA 55207N (II)[H]	SSCA 65207N (II)[H]	SSCA 75207N (II)[H]
3	UNSCA 40307N	SSCA 45307N (II)[H]	SSCA 55307N (II)[H]	SSCA 65307N (II)[H]	SSCA 75307N (II)[H]
4	UNSCA 40407N	SSCA 45407N (II)[H]	SSCA 55407N (II)[H]	SSCA 65407N (II)[H]	SSCA 75407N (II)[H]
5	UNSCA 40507N	SSCA 45507N (II)[H]	SSCA 55507N (II)[H]	SSCA 65507N (II)[H]	SSCA 75507N (II)[H]
6	UNSCA 40607N	–	–	–	–
7	UNSCA 40707N	–	–	–	–
Screw	UNSAS 1407H	SSC 2008SH	SSC 2008H	SSC 2008H	SSC 2008H

Mill Abutment Hex Non-Hex

▸Used for when high customization in abutment path and prosthetic margins are needed.

· Abutment of cement retained type that uses dental cement to fix prosthesis in place
· Hex / Non-Hex type
· Anti-rotational feature on abutment post.
· Uses 1.2 Hex Driver
· Packing Unit : Abutment + Abutment Screw (SSC 2008H)
· Tightening Torque : 30~35Ncm

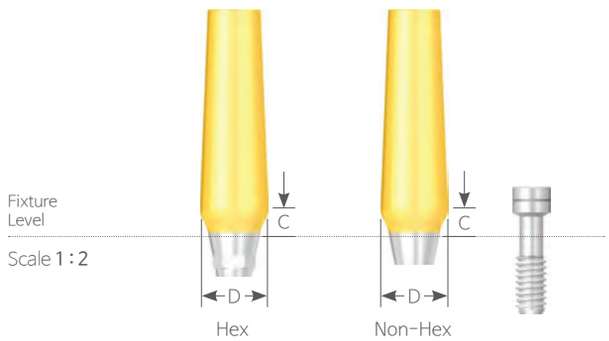

R W Hex

Unit mm I Scale 1 : 1.25

Fixture Size	Regular · Wide				
Diameter	Ø4.0	Ø4.5	Ø5.5	Ø6.5	Ø7.5
Cuff	1.5	2	2.5	3	3

SSMA **4015H [H]** SSMA **4520H [H]** SSMA **5525H [H]** SSMA **6530H [H]** SSMA **7530H [H]**

R W Non-Hex

Unit mm I Scale 1 : 1.25

Fixture Size	Regular · Wide				
Diameter	Ø4.0	Ø4.5	Ø5.5	Ø6.5	Ø7.5
Cuff	1.5	2	2.5	3	3

SSMA **4015N [H]** SSMA **4520N [H]** SSMA **5525N [H]** SSMA **6530N [H]** SSMA **7530N [H]**

Angled Abutment Hex Non-Hex

▸Used to modify the fixture's path mainly used for anterior teeth.

· For Cement retained Type of Abutment
· Depending on the angle slope, it is categorized into 15° and 25° Angled Abutment
· Availability of A type and B type of hex part overcomes the limitation of direction of the abutment
· Gold colored gingival area for esthetic purpose
· Uses 1.2 Hex Driver
· Packing Unit : Abutment + Abutment Screw (N UNSAS 1407H, R W SSC 2008H)
· Tightening Torque : N 20Ncm, R W 30~35Ncm

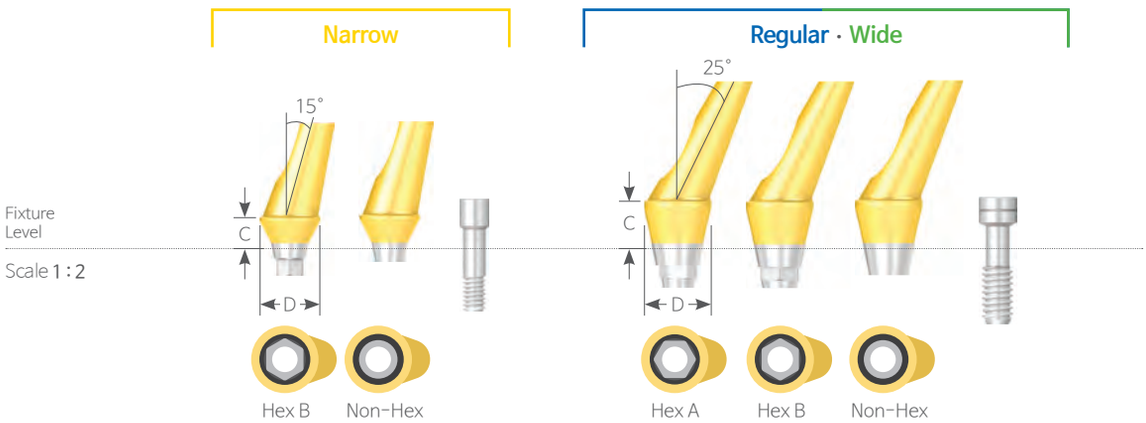

R W Hex A

Fixture Size	Narrow	Regular · Wide			
Diameter	Ø4.0	Ø4.5		Ø5.5	
Angle	15°	15°	25°	15°	25°
Cuff 1.5	-	SSAA 451515AH[H]	SSAA 451525AH[H]	SSAA 551515AH[H]	SSAA 551525AH[H]
2.0	-	SSAA 452015AH[H]	SSAA 452025AH[H]	SSAA 552015AH[H]	SSAA 552025AH[H]
3.0	-	SSAA 453015AH[H]	SSAA 453025AH[H]	SSAA 553015AH[H]	SSAA 553025AH[H]
4.0	-	SSAA 454015AH[H]	SSAA 454025AH[H]	SSAA 554015AH[H]	SSAA 554025AH[H]
5.0	-	SSAA 455015AH[H]	SSAA 455025AH[H]	SSAA 555015AH[H]	SSAA 555025AH[H]

N R W Hex B

Fixture Size	Narrow	Regular · Wide			
Cuff 1.5	-	SSAA 451515BH[H]	SSAA 451525BH[H]	SSAA 551515BH[H]	SSAA 551525BH[H]
2.0	UNSAA 402015BH	SSAA 452015BH[H]	SSAA 452025BH[H]	SSAA 552015BH[H]	SSAA 552025BH[H]
3.0	-	SSAA 453015BH[H]	SSAA 453025BH[H]	SSAA 553015BH[H]	SSAA 553025BH[H]
4.0	UNSAA 404015BH	SSAA 454015BH[H]	SSAA 454025BH[H]	SSAA 554015BH[H]	SSAA 554025BH[H]
5.0	-	SSAA 455015BH[H]	SSAA 455025BH[H]	SSAA 555015BH[H]	SSAA 555025BH[H]

N R W Non-Hex

Fixture Size	Narrow	Regular · Wide			
Cuff 1.5	-	SSAA 451515N[H]	SSAA 451525N[H]	SSAA 551515N[H]	SSAA 551525N[H]
2.0	UNSAA 402015N	SSAA 452015N[H]	SSAA 452025N[H]	SSAA 552015N[H]	SSAA 552025N[H]
3.0	-	SSAA 453015N[H]	SSAA 453025N[H]	SSAA 553015N[H]	SSAA 553025N[H]
4.0	UNSAA 404015N	SSAA 454015N[H]	SSAA 454025N[H]	SSAA 554015N[H]	SSAA 554025N[H]
5.0	-	SSAA 455015N[H]	SSAA 455025N[H]	SSAA 555015N[H]	SSAA 555025N[H]

UCLA Abutment

UCLA Gold Abutment Hex Non-Hex

▸Can be used when there is limitation on path, esthetics, space etc.
· For screw retained prosthesis
· Directly casted on abutment to make inner part of prosthesis
Customized abutment can be made which can be applied to variety of cases.
Strong enough for cases requiring difficult angle modification.
· After the customization, **dental gold alloy will be casted only**.
· Melting range on cylinder area : 1400~1450℃
(**Do not use with non-precious metal alloy**)
· Hex / Non-Hex type · Uses 1.2 Hex Driver
· Packing Unit : Abutment + Abutment Screw (SSC 2008H)
· Tightening Torque : 30~35Ncm

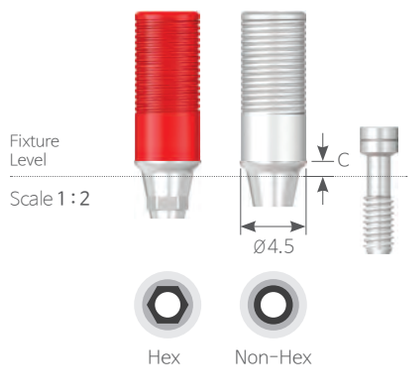

R W D Ø4.5

Unit mm I Scale 1 : 1.25

Fixture Size	Regular · Wide	
Type	Hex	Non-Hex
Cuff 1	SSGA **4510H [H]**	SSGA **4510N [H]**
3	SSGA **4530H [H]**	SSGA **4530N [H]**

UCLA CCM Abutment Hex Non-Hex

· After the customization, **non-precious metal alloy will be casted only**.
· Hex / Non-Hex type
· Uses 1.2 Hex Driver
· Packing Unit : Abutment + Abutment Screw (N UNSAS 1407H, R W SSC 2008H)
· Tightening Torque : 30~35Ncm

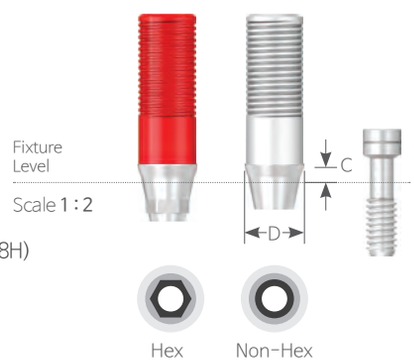

N R W

Unit mm I Scale 1 : 1.25

Fixture Size	Narrow		Regular · Wide			
Diameter	Ø4.0	Ø4.0	Ø4.0	Ø4.0	Ø4.5	Ø4.5
Hex	Hex	Non-Hex	Hex	Non-Hex	Hex	Non-Hex
Cuff 1	UNSCCA **4010H**	UNSCCA **4010N**	CCSS **4010H [H]**	CCSS **4010N [H]**	CCSS **4510H [H]**	CCSS **4510N [H]**
3	UNSCCA **4030H**	UNSCCA **4030N**	-	-	CCSS **4530H [H]**	CCSS **4530N [H]**

UCLA Plastic Abutment Hex Non-Hex

· Less accuracy on connecting part compared to UCLA Gold Abutment.
· After the customization, **non-precious metal alloy will be casted only**.
· Be careful about fracture if deleted
· Hex / Non-Hex type
· Uses 1.2 Hex Driver
· Packing Unit : Abutment + Abutment Screw (SSC2008H)
· Tightening Torque : Tightening smoothly before casting,
30~35Ncm after casting
※ Non-medical devices

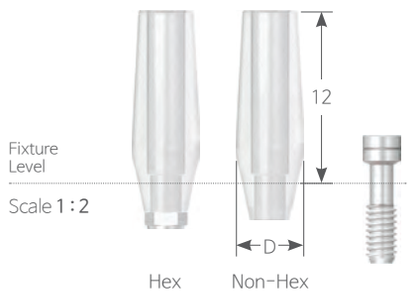

R W Length 12

Unit mm | Scale 1 : 1.25

Fixture Size	Regular · Wide			
Diameter	Ø4.5	Ø4.5	Ø5.5	Ø5.5
Type	Hex	Non-Hex	Hex	Non-Hex

SSPA **4512H [H]**

SSPA **4512N [H]**

SSPA **5512H [H]**

SSPA **5512N [H]**

Cement-Retained Restorations

Solid Abutment

Fixture - N R W

Plastic Coping

029P

Solid Abutment Analog

029P

Impression Cap

028P

Solid Abutment

027P

Protect Cap

028P

UFII Narrow

007P

UFII Regular

008P

UFII Wide

009P

Cover Screw

010P

Healing Abutment

011P

Solid Abutment

▸Abutment of cement retained type that uses dental cement to fix prosthesis in place
· Abutment and screw are in one-piece structure.
· Taking impression at abutment level.
· Gold colored gingival area for esthetic purpose
· Uses1.2 Hex Driver / Solid Abutment Driver
· Packing Unit : Abutment + Protect Cap
· Tightening Torque : N 20Ncm, R W 30~35Ncm

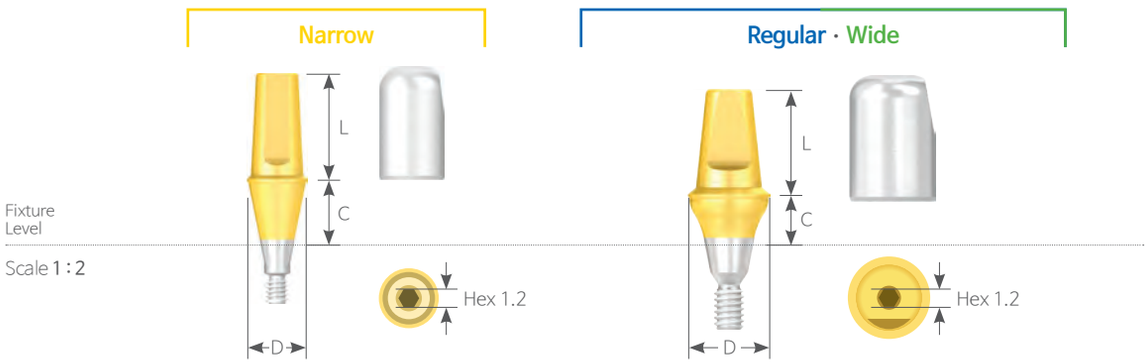

N R W

Unit mm I Scale 1 : 1.25

Fixture Size	Narrow	Regular · Wide			
Abut. Diameter	Ø4.0	Ø4.5	Ø5.5	Ø6.5	Ø7.5
Abut. Length 4 Cuff 1	-	SSSA **45104**	SSSA **55104**	SSSA **65104**	SSSA **75104**
2	-	SSSA **45204**	SSSA **55204**	SSSA **65204**	SSSA **75204**
3	-	SSSA **45304**	SSSA **55304**	SSSA **65304**	SSSA **75304**
4	-	SSSA **45404**	SSSA **55404**	SSSA **65404**	SSSA **75404**
5	-	SSSA **45504**	SSSA **55504**	SSSA **65504**	SSSA **75504**
Abut. Length 5.5 Cuff 1	UNSSA **40105**	SSSA **45105**	SSSA **55105**	SSSA **65105**	SSSA **75105**
2	UNSSA **40205**	SSSA **45205**	SSSA **55205**	SSSA **65205**	SSSA **75205**
3	UNSSA **40305**	SSSA **45305**	SSSA **55305**	SSSA **65305**	SSSA **75305**
4	UNSSA **40405**	SSSA **45405**	SSSA **55405**	SSSA **65405**	SSSA **75405**
5	UNSSA **40505**	SSSA **45505**	SSSA **55505**	SSSA **65505**	SSSA **75505**
6	UNSSA **40605**	-	-	-	-
7	UNSSA **40705**	-	-	-	-
Abut. Length 7 Cuff 1	UNSSA **40107**	SSSA **45107**	SSSA **55107**	SSSA **65107**	SSSA **75107**
2	UNSSA **40207**	SSSA **45207**	SSSA **55207**	SSSA **65207**	SSSA **75207**
3	UNSSA **40307**	SSSA **45307**	SSSA **55307**	SSSA **65307**	SSSA **75307**
4	UNSSA **40407**	SSSA **45407**	SSSA **55407**	SSSA **65407**	SSSA **75407**
5	UNSSA **40507**	SSSA **45507**	SSSA **55507**	SSSA **65507**	SSSA **75507**
6	UNSSA **40607**	-	-	-	-
7	UNSSA **40707**	-	-	-	-

Solid Abutment Components

Protect Cap

▸Used to protect abutment in the patient's mouth and minimize the discomfort for the patient.

· Can be applied to substructure of temporary prosthesis.
· Convenient locking mechanism.

Narrow | Regular · Wide

N R W

Unit mm I Scale 1 : 2

Fixture Size	Narrow	Regular · Wide			
Abut. Diameter	Ø4.0	Ø4.5	Ø5.5	Ø6.5	Ø7.5
Abut. Length 4	–	SSAC **4504**	SSAC **5504**	SSAC **6504**	SSAC **7504**
5.5	UNSAC **4005**	SSAC **4505**	SSAC **5505**	SSAC **6505**	SSAC **7505**
7	UNSAC **4007**	SSAC **4507**	SSAC **5507**	SSAC **6507**	SSAC **7507**

Impression Cap

▸Used for taking impression of Solid abutment.

· Different coloring provides easy identification for abutment diameter.
· Convenient locking mechanism.

Scale 1 : 2

N R W Length 11

Unit mm I Scale 1 : 1.25

Fixture Size	Narrow	Regular · Wide			
Abut. Diameter	Ø4.0	Ø4.5	Ø5.5	Ø6.5	Ø7.5

UNSAI **4011** | SSAI **4511** | SSAI **5511** | SSAI **6511** | SSAI **7511**

Solid Abutment Analog

· Solid Abutment is formed on working model.
· Different coloring provides easy identification for abutment diameter.
※ Non-medical devices

Scale 1 : 2

N R W

Unit mm I Scale 1 : 1.25

Fixture Size	Narrow	Regular · Wide			
Abut. Diameter	Ø4.0	Ø4.5	Ø5.5	Ø6.5	Ø7.5
Abut. Length 4	-	SSAA **4504**	SSAA **5504**	SSAA **6504**	SSAA **7504**
5.5	UNSSAA **4005**	SSAA **4505**	SSAA **5505**	SSAA **6505**	SSAA **7505**
7	UNSSAA **4007**	SSAA **4507**	SSAA **5507**	SSAA **6507**	SSAA **7507**

Plastic Coping

▸Can be used as prosthesis' frame work by installing Solid fixture analog.
· Different coloring provides easy identification on types of case.
※ Non-medical devices

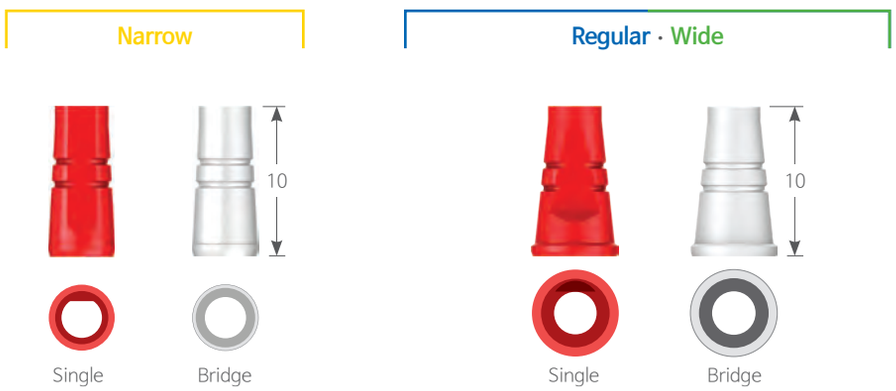

N R W Length 10

Unit mm I Scale 1 : 2

Fixture Size	Narrow	Regular · Wide			
Abut. Diameter	Ø4.0	Ø4.5	Ø5.5	Ø6.5	Ø7.5
● Single	UNSAP **4010S**	SSAP **4510S**	SSAP **5510S**	SSAP **6510S**	SSAP **7510S**
○ Bridge	UNSAP **4010B**	SSAP **4510B**	SSAP **5510B**	SSAP **6510B**	SSAP **7510B**

Screw-Retained Restorations

Octa Abutment

Fixture - R W

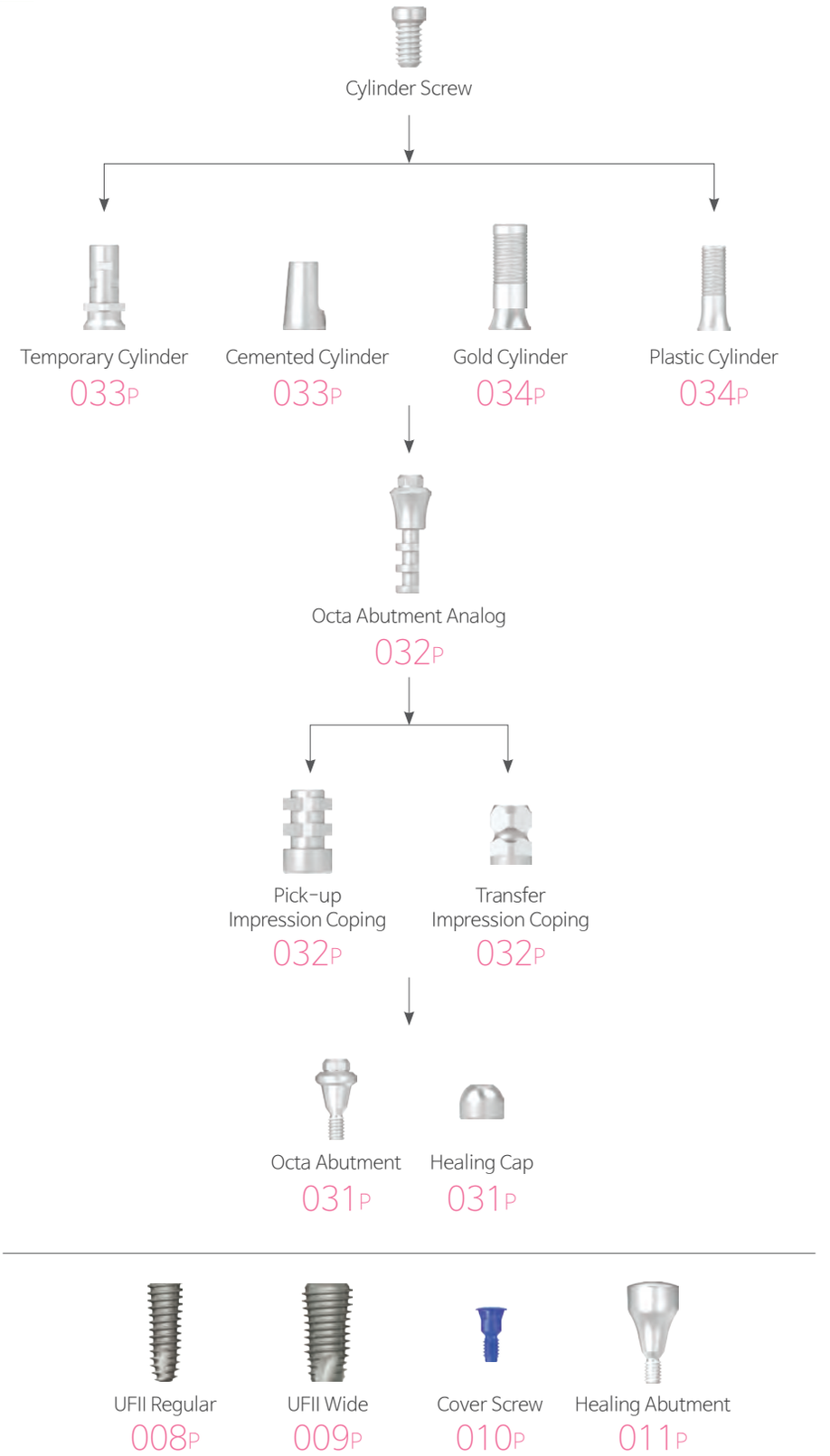

Octa Abutment

▸Used to create screw retained prosthesis on poor path bridge case.
· Convert internal connection to external connection, and then use cylinder on it for prosthesis.
· Uses Octa Abutment Driver (HD 3006A-Short / HD 3012A-Long)
· Packing Unit : Octa Abutment + Abutment Holder (Convenient to install in patient's Mouth.)
· Tightening Torque : 30~35Ncm

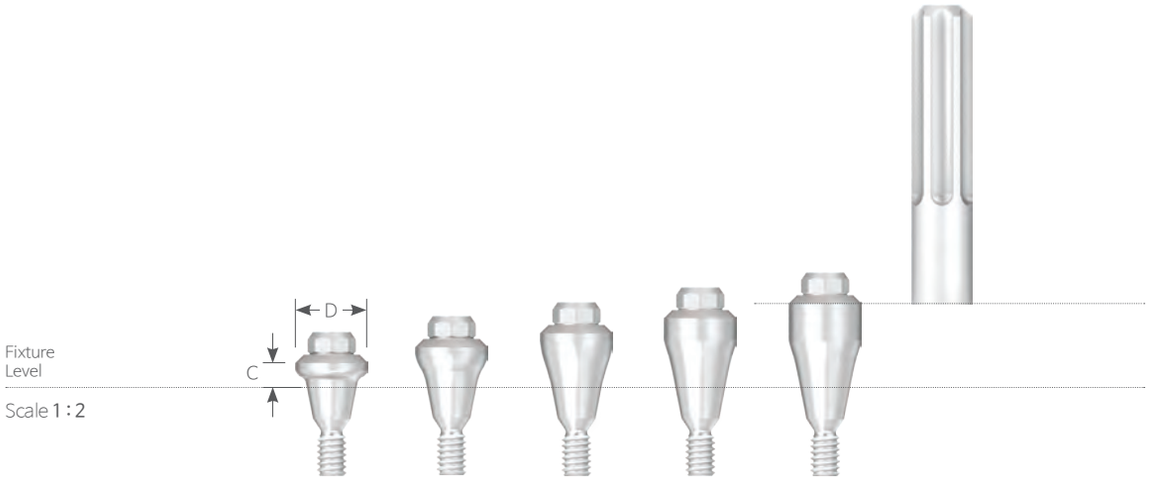

R W

Unit mm I Scale 1 : 2

Fixture Size	Regular · Wide		
Diameter	Ø4.8	Ø6.0	Ø6.5
Cuff 1.5	SSOA **4815**	SSOA **6015**	SSOA **6515**
2.5	SSOA **4825**	SSOA **6025**	SSOA **6525**
3.5	SSOA **4835**	SSOA **6035**	SSOA **6535**
4.5	SSOA **4845**	SSOA **6045**	SSOA **6545**
5.5	SSOA **4855**	SSOA **6055**	SSOA **6555**

Healing Cap

▸To protect Octa Abutment in oral, and minimize the discomfort for patient.
· Uses 1.2 Hex Driver
· Packing Unit : Healing Cap + Cylinder Screw (STI 2004H)
· Tightening Torque : 20Ncm

R W

Unit mm I Scale 1 : 2

Fixture Size	Regular · Wide		
Abut. Diameter	Ø4.8	Ø6.0	Ø6.5
	HCI **48504**	HCI **60704**	HCI **65704**

Octa Abutment Components

Pick-up Impression Coping Octa Non-Octa

▸Custom tray is used for pick-up type of impression taking.

· Asymmetry structure to minimize close interruption
· Uses 1.2 Hex Driver
· Packing Unit : Pick-up Impression Coping + Guide Pin (POI 2610)

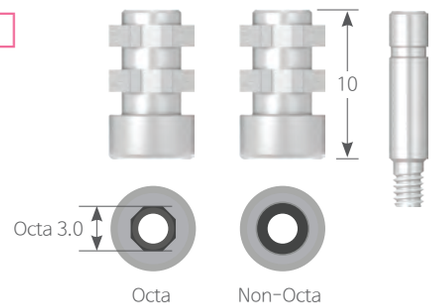

R W Length 10

Unit mm I Scale 1 : 2

Fixture Size	Regular · Wide		
Abut. Diameter	Ø4.8	Ø6.0	Ø6.5
Octa	IPI **48610**	IPI **60710**	IPI **65710**
Non-Octa	IPI **48610N**	IPI **60710N**	IPI **65710N**

Transfer Impression Coping

▸Ready-made tray is used for transfer type of impression taking.

· Double sided structure which elevates the quality
· Uses 1.2 Hex Driver
· Packing Unit : Transfer Impression Coping + Coping Screw (IOTI 48010S)

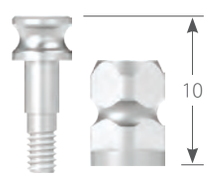

R W Length 10

Unit mm I Scale 1 : 2

Fixture Size	Regular · Wide		
Abut. Diameter	Ø4.8	Ø6.0	Ø6.5
	IOTI **48010**	IOTI **60010**	IOTI **65010**

Octa Abutment Analog

▸Octa Abutment is formed on working model.

※ Non-medical devices

R W

Unit mm I Scale 1 : 2

Fixture Size	Regular · Wide		
Abut. Diameter	Ø4.8	Ø6.0	Ø6.5
Length 10	-	RCI **60014**	-
12	RCI **48014**	-	RCI **65014**

Temporary Cylinder Octa Non-Octa

· Uses 1.2 Hex Driver
· Packing Unit : Temporary Cylinder + Cylinder Screw (STI 2004H)
· Tightening Torque : 20Ncm

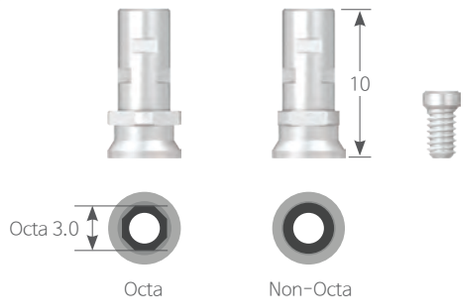

R W Length 10

Unit mm I Scale 1 : 2

Fixture Size	Regular · Wide		
Abut. Diameter	Ø4.8	Ø6.0	Ø6.5
Octa	ITC **48010 [H]**	ITC **60010 [H]**	ITC **65010 [H]**
Non-Octa	ITC **48010N [H]**	ITC **60010N [H]**	ITC **65010N [H]**

Cemented Cylinder Octa Non-Octa

· Uses 1.2 Hex Driver
· Packing Unit : Cemented Cylinder + Cylinder Screw (STI 2004H)
· Tightening Torque : 20Ncm

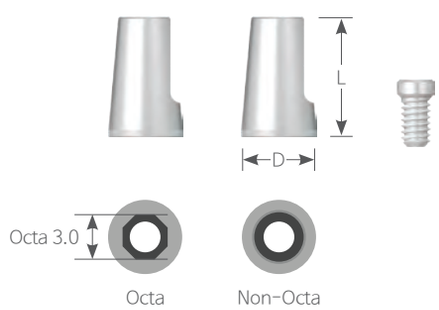

R W

Unit mm I Scale 1 : 2

Fixture Size	Regular · Wide			
Abut. Diameter	Ø4.8	Ø4.8	Ø6.0	Ø6.5
Cylinder Diameter	Ø5.0	Ø5.8	Ø6.4	Ø6.9
Length	8	8	9	9
Octa	ICC **48508 [H]**	ICC **48588 [H]**	ICC **60649 [H]**	ICC **65309 [H]**
Non-Octa	ICC **48508N [H]**	ICC **48588N [H]**	ICC **60649N [H]**	ICC **65309N [H]**

Octa Abutment Components

Gold Cylinder Octa Non-Octa

· After the customization, **dental gold alloy will be casted only**.
· Cylinder fusion range: 1400 ˚ C~1450 ˚ C
(Do not use with non-precious metal alloy)
· Uses 1.2 Hex Driver
· Packing Unit : Gold Cylinder + Cylinder Screw (STI 2004H)
· Tightening Torque : 20Ncm

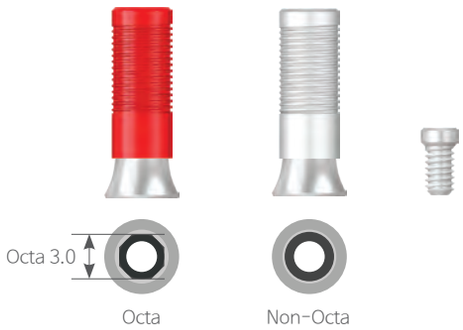

R W

Unit mm I Scale 1 : 2

Fixture Size	Regular · Wide		
Abut. Diameter	Ø4.8	Ø6.0	Ø6.5
Octa ●	AGI **48504 [H]**	AGI **60004 [H]**	AGI **65704 [H]**
Non-Octa ○	AGI **48504N [H]**	AGI **60004N [H]**	AGI **65704N [H]**

Plastic Cylinder Octa Non-Octa

· After the customization, **non-precious metal alloy will be casted only**.
· Less accuracy on connecting part compared to Gold Cylinder.
· Uses 1.2 Hex Driver
· Packing Unit : Plastic Cylinder + Cylinder Screw (STI 2004H)
· Tightening Torque : 20Ncm
※ Non-medical devices

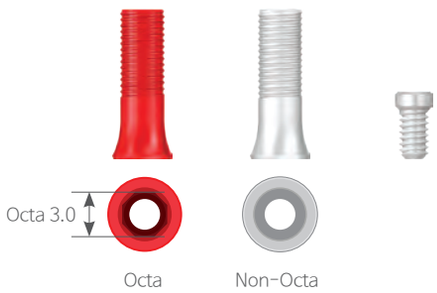

R W

Unit mm I Scale 1 : 2

Fixture Size	Regular · Wide		
Abut. Diameter	Ø4.8	Ø6.0	Ø6.5
Octa ●	API **48514 [H]**	API **60714 [H]**	API **65714 [H]**
Non-Octa ○	API **48514N [H]**	API **60714N [H]**	API **65714N [H]**

Overdenture-Retained Restorations

Ball Abutment

Fixture - R W

O-Ring
039P

Retainer
038P

Ball Cap
038P

Ball Abutment Analog
038P

Ball Abutment
037P

UFII Regular
008P

UFII Wide
009P

Cover Screw
010P

Healing Abutment
011P

Overdenture-Retained Restorations

Ball Abutment / Locator

Fixture - N R W

Stainless Steel Housing
039P

OT Cap
039P

Ball Abutment Analog
038P

Ball Abutment
037P

Denture Cap
041P

Male
041P

Locator
041P

UFII Narrow
007P

UFII Regular
008P

UFII Wide
009P

Cover Screw
010P

Healing Abutment
011P

Ball Abutment

▸Used to create over-denture for edentulous patient.
▸Used when fixed type prosthesis is difficult due to severe bone or soft tissue loss.

· Composition of o-ring: For dental lab use (black), for clinic use (orange)
· Post partis coloring in gold
· Path recovery to the maximum of 20°
· Uses Ball Abutment Driver
· Packing Unit :
Ball Abutment + Abutment Holder (Convenient to install in patient's mouth) + O-Ring (Orange : For clinic use)
· Tightening Torque : N 20Ncm, R W 30~35Ncm

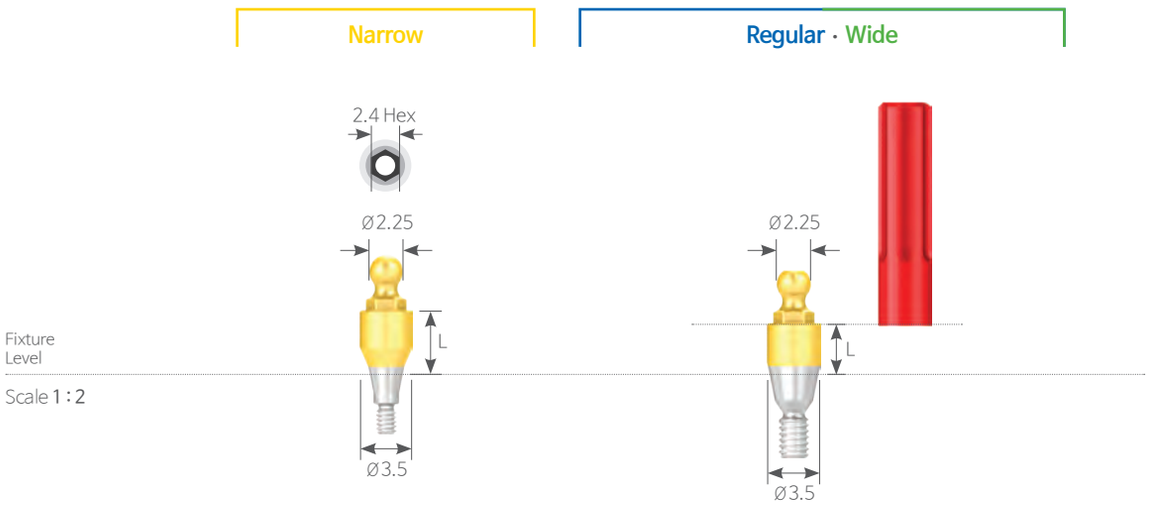

N R W

Unit mm

Fixture Size	Narrow	Regular · Wide
Diameter	Ø3.5	Ø3.5
Length 1	UNSBA **3510**	SSBA **3510**
2	UNSBA **3520**	SSBA **3520**
3	UNSBA **3530**	SSBA **3530**
4	UNSBA **3540**	SSBA **3540**
5	UNSBA **3550**	SSBA **3550**
6	UNSBA **3560**	SSBA **3560**
7	UNSBA **3570**	-

Ball Abutment Components

Ball Abutment Analog

▸Provides anchor point for ball abutment on working model.
※ Non-medical devices

N R W Length 10

Unit mm I Scale 1 : 2

Fixture Size	Narrow	Regular · Wide
Abut. Diameter	Ø3.5	Ø3.5
	UNSBAA **3510**	SABA **3510**

Retainer

· Advantageous when occlusal distance is low compare to Ball Cap.
· Packing Unit : Retainer + O-Ring (OR 0450B / OR 0450O)

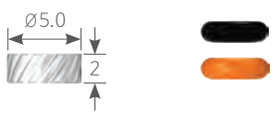

N R W **D Ø5.0** Length 2

Unit mm I Scale 1 : 2

Fixture Size	Narrow · Regular · Wide
	RT **0502**

Ball Cap

· Outstanding consistency and clip-on
· Packing Unit : Ball Cap + O-Ring (OR 0450B / OR 0450O)

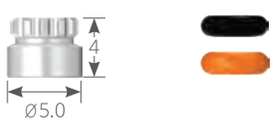

N R W **D Ø5.0** Length 4

Unit mm I Scale 1 : 2

Fixture Size	Narrow · Regular · Wide
	BC **5004**

O-Ring

· Black : · Black : For dental lab use
· Orange : For clinic use (Over 6Ncm)
· Packing Unit : O-Ring 1 Piece

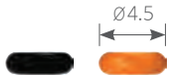

N R W D Ø4.5

Unit mm I Scale 1 : 2

Fixture Size	Narrow · Regular · Wide	
Color	OR **0450B** ● Black	OR **0450O** ● Orange

OT Cap Orange

· Excellent retention is obtained with broader contact area compared to o-ring.
· Packing Unit : 6 Pieces
· Caution) There is no separate cap for dental lab. Replace the cap after making the denture.

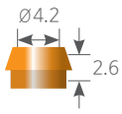

N R W D Ø4.2 Length 2.6

Unit mm I Scale 1 : 2

Fixture Size	Narrow · Regular · Wide
	049PCNDR8

Stainless Steel Housing

· The new stainless steel housing decrease the size that can provide better stability and retention with resin.
· Packing Unit : 2 Pieces

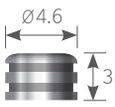

N R W D Ø4.6 Length 3

Unit mm I Scale 1 : 2

Fixture Size	Narrow · Regular · Wide
	041CAN

Ball Abutment Components

Insertion Tool For Caps

▸Used for insertion the cap in the stainless housing.

· Possible to use both tip in a normal and micro situation.

· Packing Unit : Handle + Tip

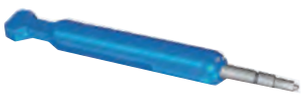

N R W

Fixture Size	Narrow · Regular · Wide
	085IAC

Remover Tool For Caps

▸Used for removing the cap from the stainless housing

· Possible to use in both normal and micro situation with one tool.

N R W

Fixture Size	Narrow · Regular · Wide
	091EC

Locator

· Upgraded from the conventional method used (O-Ring System, Bar Type System, etc.)
by connecting a locator abutment to the fixture
and used by connecting to / separating from male part connected to the denture

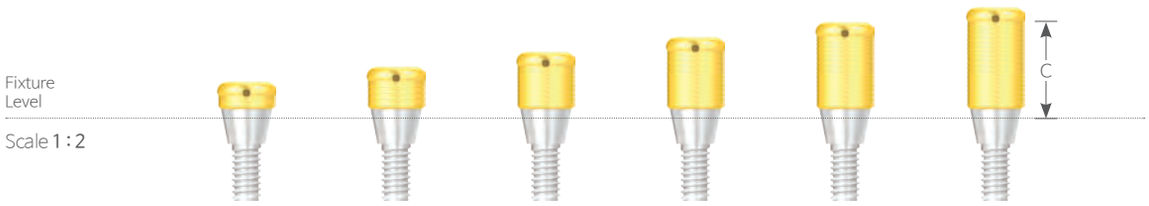

N R W

Unit mm

Fixture Size	Narrow	Regular · Wide
Cuff 1	02961	02967
2	02962	02968
3	02963	02969
4	02964	02970
5	02965	02971
6	02966	02972

Male

N R W Standard 20°

Retention	1.5 LBS	3 LBS	5 LBS
	LOC **8529**	LOC **8527**	LOC **8524**
Intensity	Weak	Intermediate	Strong

N R W Angled 40°

Retention	0 LBS	1 LBS	2 LBS	4 LBS
	LOC **8558**	LOC **8548**	LOC **8915**	LOC **8547**
Intensity	Weak	Intermediate	Intermediate	Strong

Male Pakage

· Packing Unit : Denture Caps(LOC 8510) +
Black Processing Males(LOC 8515) +
Retention Males(White, Pink, Blue) +
Block-Out Spacers(LOC 8514)

N R W

Type	2 Set
	08519-2

Screw-Retained Restorations

Multiunit Abutment

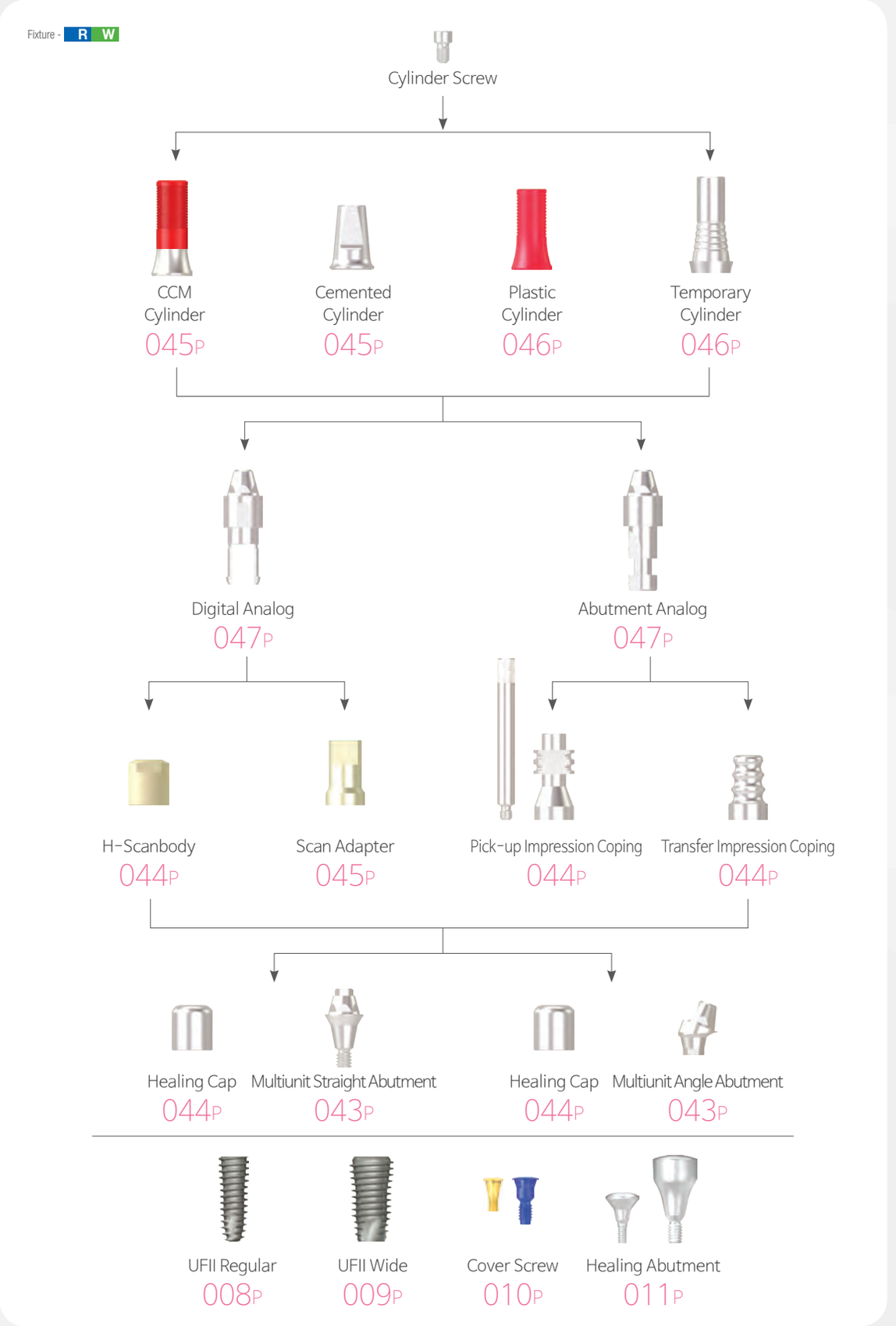

Multiunit Straight Abutment

▸Use it to fabricate a screw-retained prosthesis in a bridge case with diffrent path.

· Screw-Retained type
· Tightening Torque : 30Ncm
· Packing unit : Multiunit Straight Abutment + Holder
· Use Ø2.0 Multiunit Straight Abutment Driver (HD 2012A)

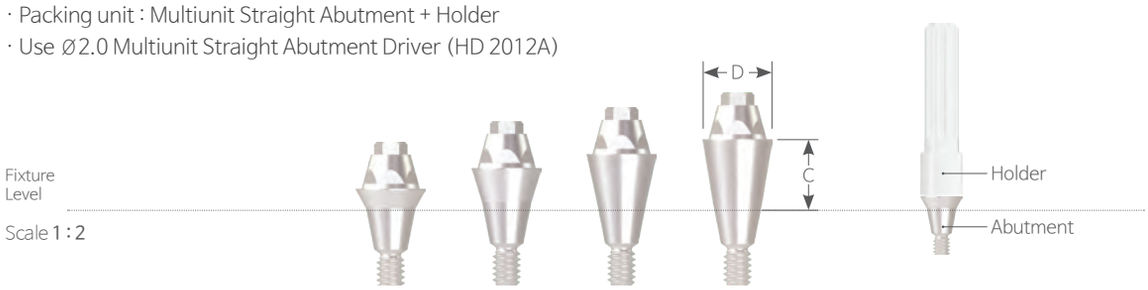

R W D Ø4.8 Hex 2.0

Unit mm

Cuff	1.5	2.5	3.5	4.5
	MSA **4801**	MSA **4802**	MSA **4803**	MSA **4804**

Multiunit Angle Abutment

· Screw Retained type (Post Hex type)
· Multiunit Angled Abutment and Fixture(UFII Regular/Wide)are fastened with the Multiunit Angled Abutment Screw (MASC 2006).
· Muliunit Angle Abutment compensate Maximum 60 °
· Tightening Torque : 30Ncm
· Packing unit : Multiunit Angled Abutment + Screw + Holder
· Use Multiunit Angle Abutment Driver : MHD 1215A (Ratchet) / MMD 1224 (Machine)

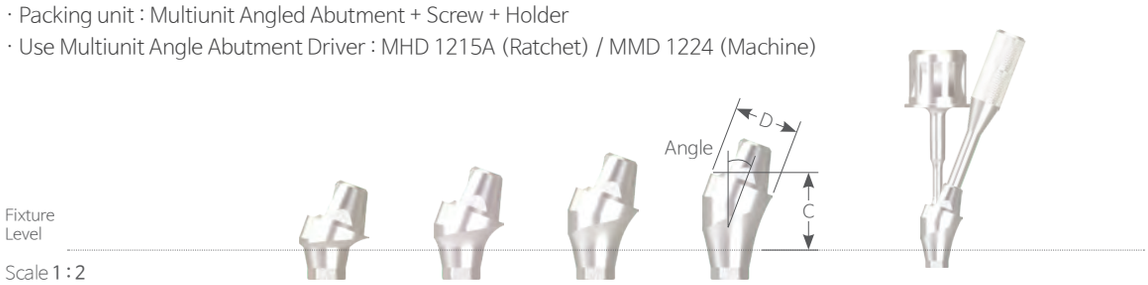

R W D Ø4.8 Hex

Unit mm

Angle	20°	30°
Cuff 2.5	MAA **482520H**	
3.5	MAA **483520H**	MAA **483530H**
4.5	MAA **484520H**	MAA **484530H**
5.5	MAA **485520H**	MAA **485530H**

Multiunit Abutment Components

Healing Cap

· To protect Abutment and minimize the discomfort in the patient's mouth
· Uses 1.2 Hex Driver
· Tightening Torque : 5~8Ncm

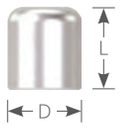

R W D Ø5.0 Length 5.5

Unit mm I Scale 1 : 2

Code	MHC **5005**

Pick-up Impression Coping

· Pick-up type Impression Coping to take an abutment level impression.
· Used with an open tray
· Only for Multiunit Abutment
· Uses 1.2 Hex Driver
· Packing Unit : Pick-up Impression Coping + Guide Pin (MGP 1615)
· Tightening Torque : 5~8Ncm

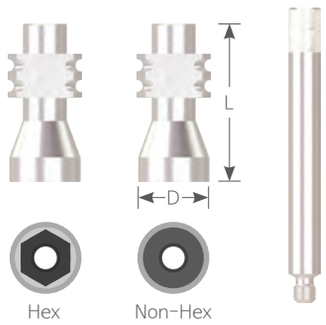

R W D Ø4.8 Length 17

Unit mm I Scale 1 : 2

Type	Hex	Non Hex
	MPI **4811H**	MPI **4811N**

Transfer Impression Coping

· Transfer type Impression Coping to take an abutment level impression.
· Used with Closed Tray
· Only for Multiunit Abutment
· Uses 1.2 Hex Driver
· Tightening Torque : 5~8Ncm

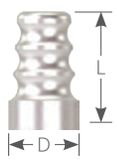

R W D Ø4.8 Length 8

Unit mm I Scale 1 : 2

Code	MTI **4808N**

H-Scan body

· Healing Abutment function
· Use for digital Impression taking
· Uses 1.2 Hex Driver
· Packing Unit : H-Scan body + Screw (MHSBSC 1603)
· Tightening Torque : 5~8Ncm

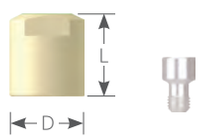

R W D Ø5.0 Length 5.6

Unit mm I Scale 1 : 2

Code	MHSB **5005H**

Scan Adapter

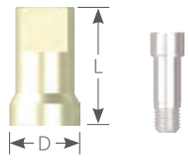

· Use for digital Impression taking
· Uses 1.2 Hex Driver
· Packing Unit : Scan Adapter + Screw(MCSC 1606)
· Tightening Torque : 5~8Ncm

R W D Ø4.8 Length 8

Unit mm I Scale 1 : 2

Code	MSCAN **4808H**

CCM Cylinder Hex Non-Hex

· Used to fabricate prosthesis on the abutment level with casting with non-precious metal alloys.
· Color Type : Hex type(Red), Non-Hex type(White)
· CCM fusion range : 1380 °C ~1420°C
· Uses 1.2 Hex Driver
· Packing Unit : CCM Cylinder + Screw(MSC 1604)
· Tightening Torque : 20Ncm

R W D Ø5.0 Length 12.6

Unit mm I Scale 1 : 2

Type	Hex	Non Hex
	MCCM **5005H**	MCCM **5005N**

Cemented Cylinder Hex Non-Hex

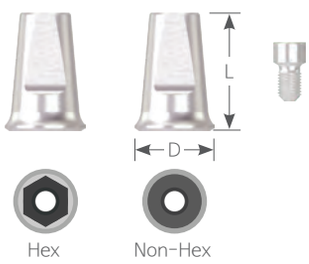

· Used to fabricate cement-retained prosthesis on the abutment level.
· Uses 1.2 Hex Driver
· Packing Unit : Cemented Cylinder + Screw(MSC 1604)
· Tightening Torque : 20Ncm

R W D Ø5.4 Length 8

Unit mm I Scale 1 : 2

Type	Hex	Non Hex
	MCEM **5408H**	MCEM **5408N**

Multiunit Abutment Components

Plastic Cylinder Hex Non-Hex

· Used to fabricate prosthesis on the abutment level with casting with non-precious metal alloys.
· Color Type : Hex type(Red), Non-Hex type(White)
· Uses 1.2 Hex Driver
· Packing Unit : Plastic Cylinder + Screw(MSC 1604)
· Tightening Torque : 20Ncm

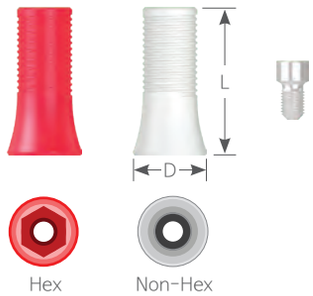

Unit mm I Scale 1 : 2

R W D Ø5.0 Length 10

Type	Hex	Non Hex
	MPLA **5010H**	MPLA **5010N**

Temporary Cylinder Hex Non-Hex

· Used to Temporary prosthesis on the abutment level.
· Uses 1.2 Hex Driver
· Packing Unit : Temporary Cylinder+ Screw(MSC 1604)
· Tightening Torque : 20Ncm

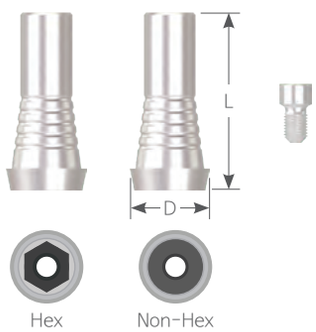

Unit mm I Scale 1 : 2

R W D Ø5.4 Length 12

Type	Hex	Non Hex
	MTEM **5412H**	MTEM **5412N**

Cylinder Screw

Unit mm I Scale 1 : 2

R W Length 4

Code	MSC **1604**

Abutment Analog

· Usage for laboratory fabricated Abutment level cast model

R **W** **D Ø4.8** Length 15

Unit mm I Scale 1 : 2

Code	MLA **4815H**

Digital Analog

· Usage for 3D Printing Model

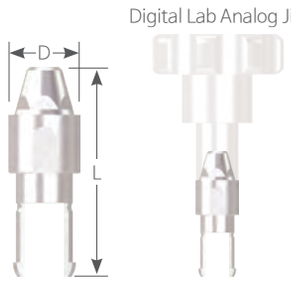

R **W** **D Ø4.8** Length 14.2

Unit mm I Scale 1 : 2

Code	MDA **4813**

Surgical Tool

Screw Driver

· Only use Multiunit Abutment

K Hex 1.2

● Sold separately
Unit mm I Scale 1 : 1

Type	Machine	Ratchet
Code	MMD **1224**	MHD **1215A**

UFⅡ Master Kit

Kit Code I UF(M) 06

· Kit composed of drill with outstanding cutting force and durability, etc.
· UFⅡ Narrow Ø3.0 Ø3.3/ UFⅡ Regular Ø3.8 Ø4.0 Ø4.5 Ø5.0 Fixture

Unit mm I Drill Scale 1 : 0.9

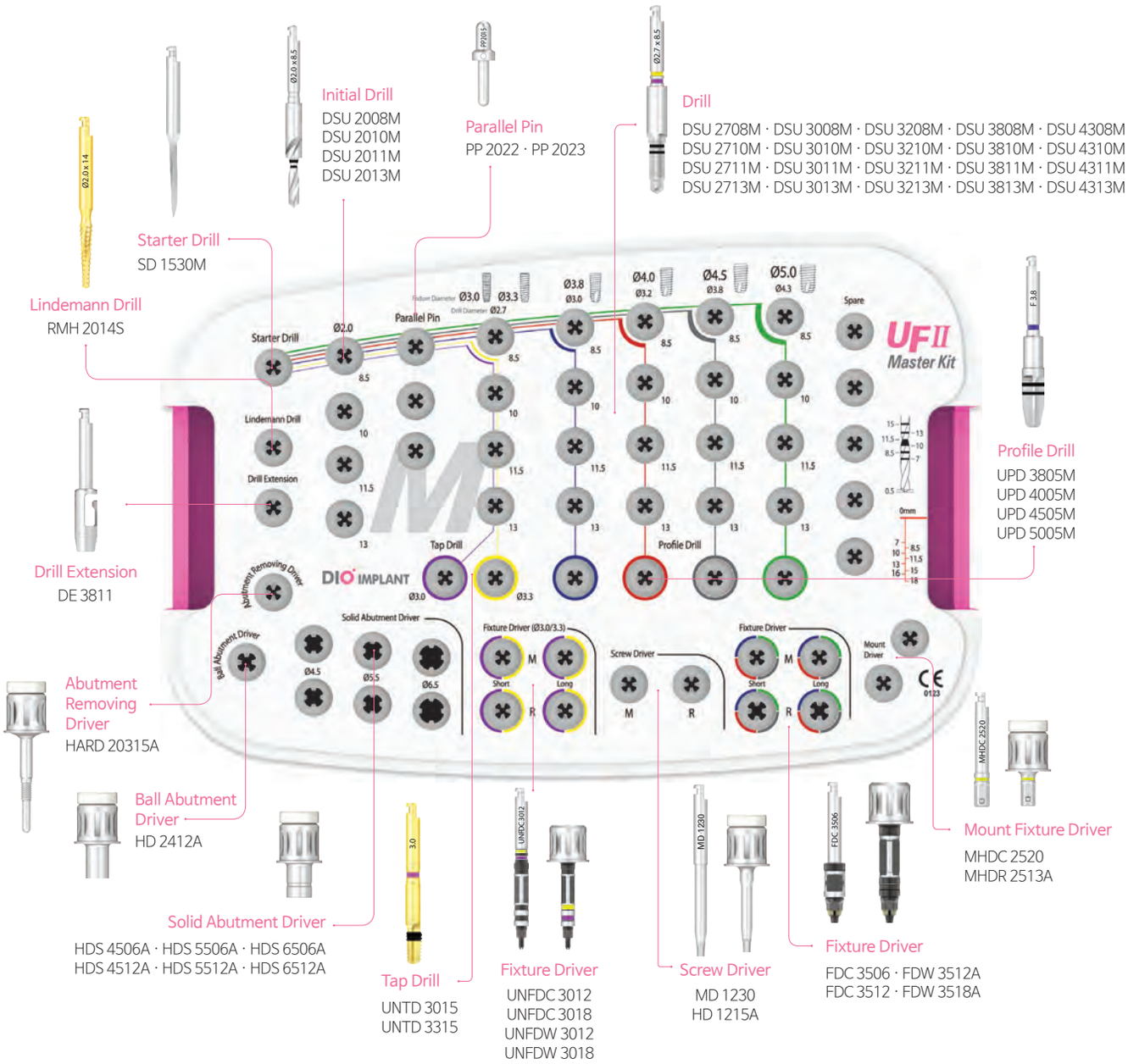

Torque Wrench
DTW 0060

Open Wrench
OW 004

Deapth Gauge
DPG 2050

UFⅡ Surgical Kit

Kit Code I UF(M) 07

· Kit composed of drill with outstanding cutting force and durability, etc.
· UFⅡ Narrow Ø3.0 Ø3.3/ UFⅡ Regular Ø3.8 Ø4.0 Ø4.5 Ø5.0 Ø5.5 Fixture

Unit mm I Drill Scale 1 : 0.9

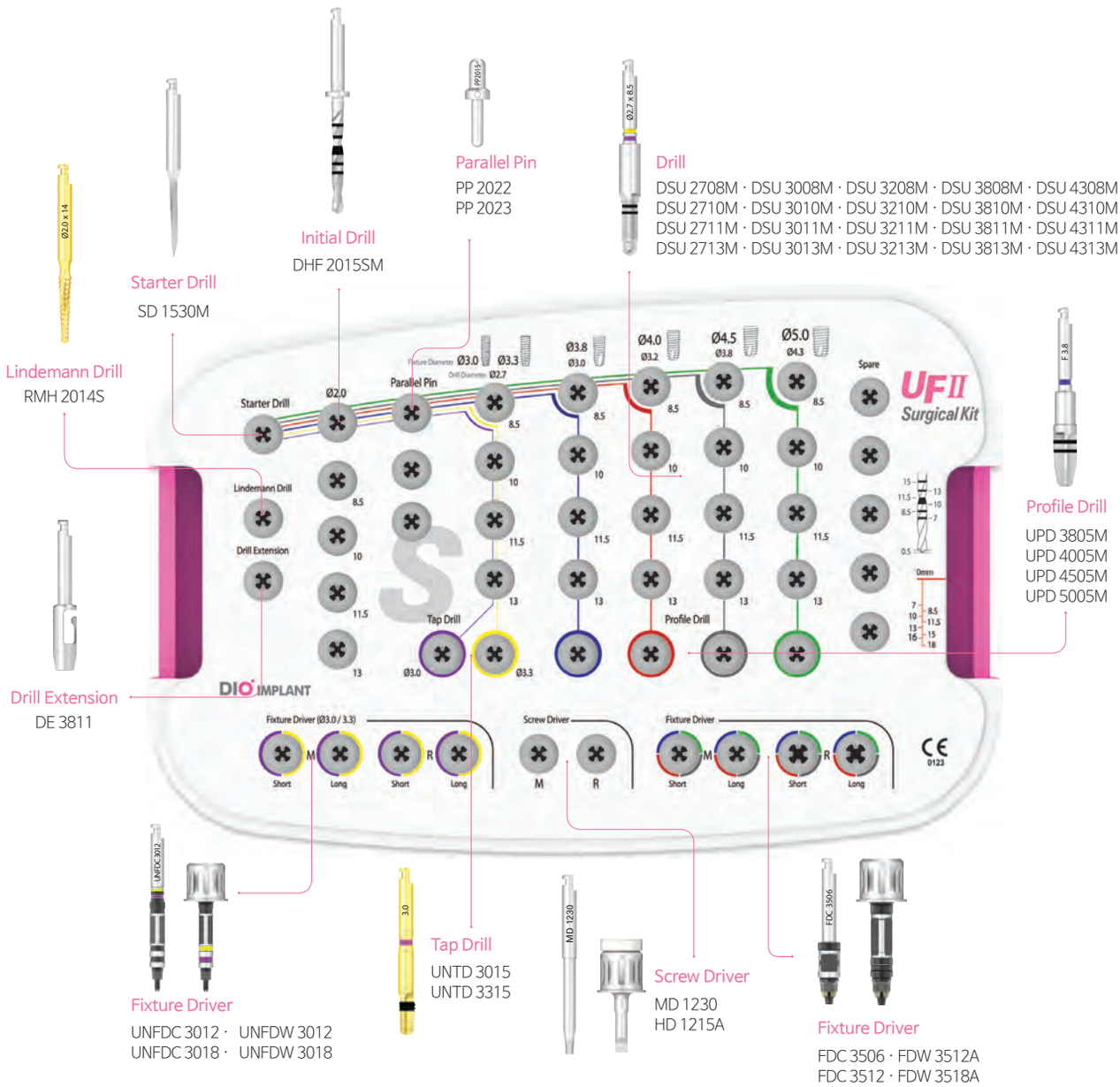

Torque Wrench
DTW 0060

Open Wrench
OW 004

Deapth Gauge
DPG 2050

Surgical Tool

Starter Drill

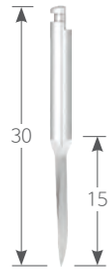

K

Unit mm I Scale 1 : 1.15

Code	SD **1530M**

Initial Drill

K **D Ø2.0** · Only use UFⅡ Master Kit

Unit mm I Scale 1 : 1

Code	DSU **2008M**	DSU **2010M**	DSU **2011M**	DSU **2013M**

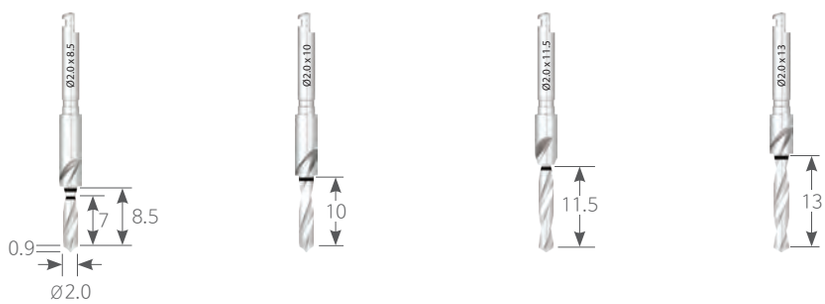

K **D Ø2.0** · Only use UFⅡ Surgical Kit

Unit mm I Scale 1 : 1.2

Code	DHF **2015SM**

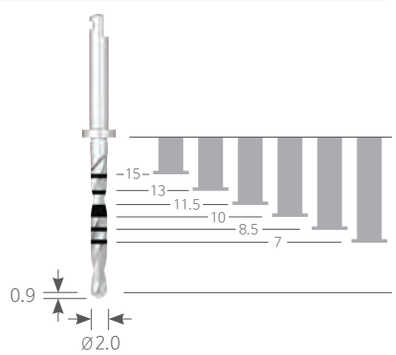

Parallel Pin

● Sold separately

K

Unit mm I Scale 1 : 1

Code	PP **1223**	PP **1523**	PP **2015**	PP **2022**	PP **2023**

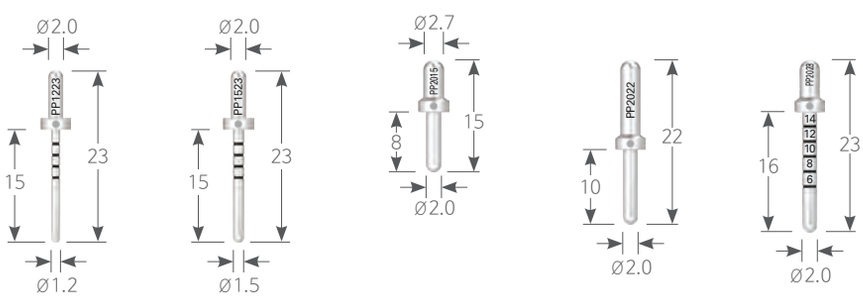

Path Pin

● Sold separately

K

Unit mm I Scale 1 : 1.2

Code	DPP **3512**

Lindemann Drill

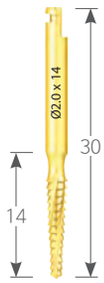

K **D Ø2.0**

Unit mm I Scale 1 : 1.2

Code	RMH **2014S**

Positioning Guide

● Sold separately

K **D Ø2.0**

Unit mm I Scale 1 : 1.2

Code	PG **0060**

Angled Path Pin

● Sold separately

K

Unit mm I Scale 1 : 1.15

Code	DAP **4515A**	DAP **4515B**
Type	Hex A	Hex B

Surgical Tool

Drill

Scale 1 : 1.15

● Sold separately

K D Ø2.7

Unit mm I Scale 1 : 1

Code	DSU 2708M	DSU 2710M	DSU 2711M	DSU 2713M	DSU 2715M	DSU 2718M
Length	8.5	10	11.5	13	15	18

K D Ø3.0

Unit mm I Scale 1 : 1

Code	DSU 3008M	DSU 3010M	DSU 3011M	DSU 3013M	DSU 3015M	DSU 3018M
Length	8.5	10	11.5	13	15	18

K D Ø3.2

Unit mm I Scale 1 : 1

Code	DSU3208M	DSU 3210M	DSU 3211M	DSU 3213M	DSU 3215M	DSU 3218M
Length	8.5	10	11.5	13	15	18

K D Ø3.8

Unit mm I Scale 1 : 1

Code	DSU 3808M	DSU 3810M	DSU 3811M	DSU 3813M	DSU 3815M	DSU 3818M
Length	8.5	10	11.5	13	15	18

K D Ø4.3

Unit mm I Scale 1 : 1

Code	DSU4308M	DSU 4310M	DSU 4311M	DSU 4313M	DSU 4315M	DSU 4318M
Length	8.5	10	11.5	13	15	18

Surgical Tool

Profile Drill

K

Unit mm I Scale 1 : 1

Fixture Size	Ø3.8	Ø4.0	Ø4.5	Ø5.0
Code	UPD 3805M	UPD 4005M	UPD 4505M	UPD 5005M

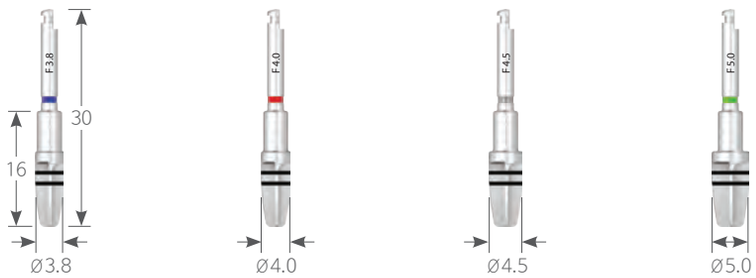

Color

Tap Drill

K

Unit mm I Scale 1 : 1

Fixture Size	Ø3.0	Ø3.3	Ø3.8	Ø4.0	Ø4.5	Ø5.0	Ø5.5
Code	UNTD 3015	UNTD 3315	UT(II) 3815	UT(II) 4015	UT(II) 4515	UT(II) 5015	UT(II) 5515

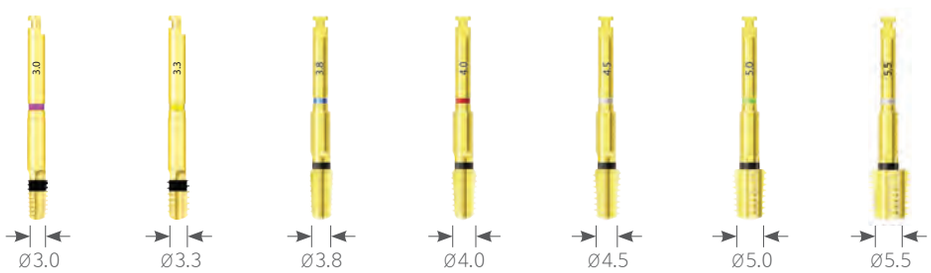

Color

Drill Extension

K

Unit mm I Scale 1 : 1.2

Code	DE 3811

Fixture Driver Narrow

● Sold separately

K Machine

Unit mm I Scale 1 : 1

Code	UNFDC 3006	UNFDC 3012	UNFDC 3018

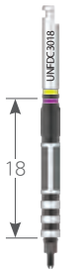

K Ratchet

Code	UNFDW 3006	UNFDW 3012	UNFDW 3018

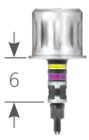

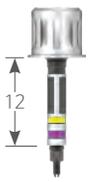

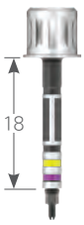

Fixture Driver Regular / Wide

● Sold separately

K Machine

Unit mm I Scale 1 : 1

Code	FDC 3506	FDC 3512	FDC 3518

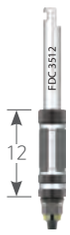

K Ratchet

Code	FDW 3506A	FDW 3512A	FDW 3518A

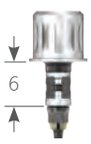

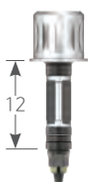

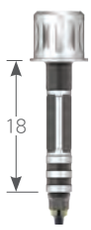

Surgical Tool

Screw Driver Machine

● Sold separately

Unit mm I Scale 1 : 1

K Slot 0.5

Code	MD 0522	MD 0530

K Hex 0.9

Code	MD 0922	MD 0930

K Hex 1.2

Code	MD 1219	MD 1222	MD 1230	MD 1234	MD 1239

K Torx 1.7

Code	MD 1719	MD 1722	MD 1730

Screw Driver Ratchet

● Sold separately

Unit mm I Scale 1 : 1

K Slot 0.5

Code	HD 0510A	HD 0515A

K Hex 0.9

Code	HD 0910A	HD 0915A	HD 0920A

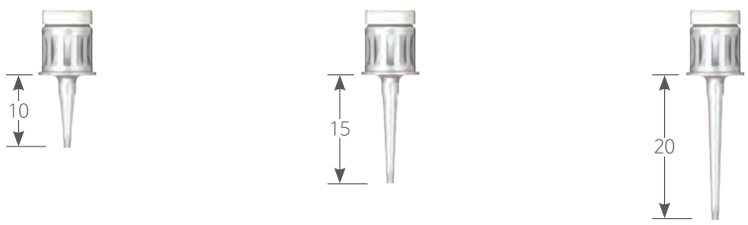

K Hex 1.2

Code	HD 1205A	HD 1210A	HD 1215A	HD 1220A	HD 1225A	HD 1230A

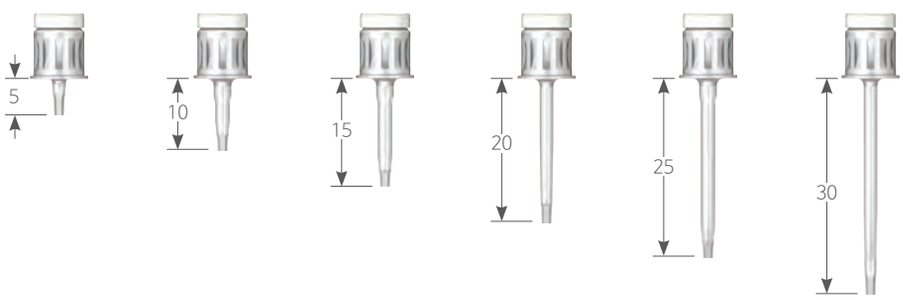

K Torx 1.7

Code	HD 1705A	HD 1710A	HD 1715A	HD 1720A	HD 1725A

Surgical Tool

Fixture Mount Driver

· Only use UF II Master Kit

K Hex 2.5

Unit mm I Scale 1 : 1

Type	Machine		Ratchet	
Code	MHDC **2520**	MHDC **2525**	MHDR **2513A**	MHDR **2518A**

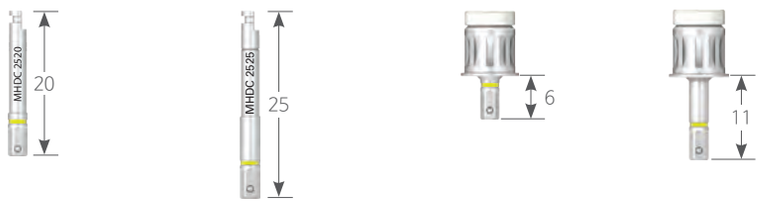

Solid Abutment Driver

· Only use UF II Master Kit

K

Unit mm I Scale 1 : 1.2

Length	6	12
Diameter Ø4.5	HDS **4506A**	HDS **4512A**
Ø5.5	HDS **5506A**	HDS **5512A**
Ø6.5	HDS **6506A**	HDS **6512A**

Ball Abutment Driver

· · Only use UF II Master Kit

● Sold separately

K

Unit mm I Scale 1 : 1

Code	HD **2406A**	HD **2412A**

Abutment Removing Driver

· Only use UF II Master Kit

K

Unit mm I Scale 1 : 1

Code	HARD **20315A**	HARD **20320A**

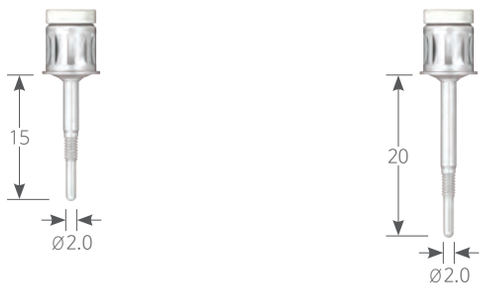

Depth Gauge

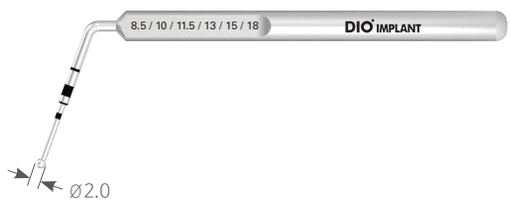

K **D Ø2.0**

Unit mm I Scale 1 : 1

Code	DPG **2050**

Open Wrench

· Used to remove Mount if the bone is soft.
· 30 ˚Neck angle for convenience in intraoral insertion.

K

Unit mm I Scale 1 : 1

Code	OW **004**

Surgical Tool

Torque Wrench

K

Unit mm I Scale 1 : 1

Code	DTW **0060**

Surgical Protocol

Crestal Placement

Starter Drill	Initial Drill	Drill	Profile Drill	Tap Drill	UF(II) Fixture
1,200rpm	1,000rpm	800rpm	300rpm	50rpm	20rpm

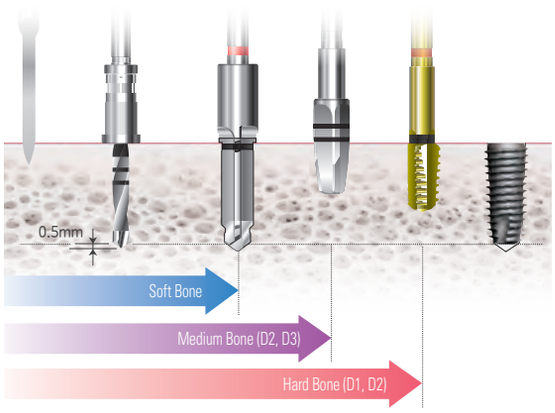

1mm Subcrestal Placement

Starter Drill	Initial Drill	Drill	Profile Drill	Tap Drill	UF(II) Fixture
1,200rpm	1,000rpm	800rpm	300rpm	50rpm	20rpm

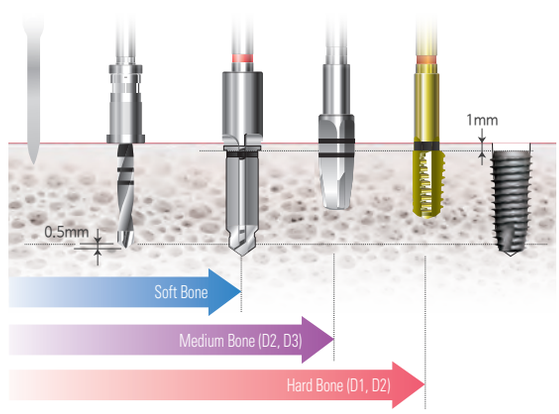

Drill

Using 8.5mm Drill with laser marking to place 7mm implant

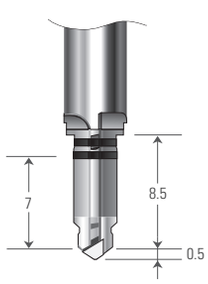

Profile Drill

Drilling depth can effect initial stability.

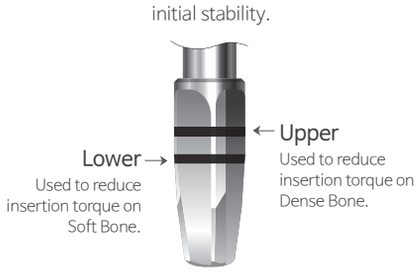

Tap Drill

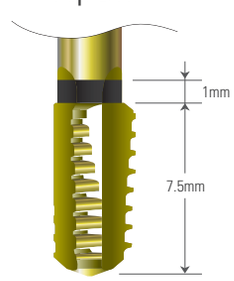

UFⅡ Narrow Kit

Kit Code I UF(M) 08

· Kit composed of drill with outstanding cutting force and durability, etc.
· UFⅡ Narrow Ø3.0 Ø3.3 Fixture

Unit mm I Drill Scale 1 : 0.9

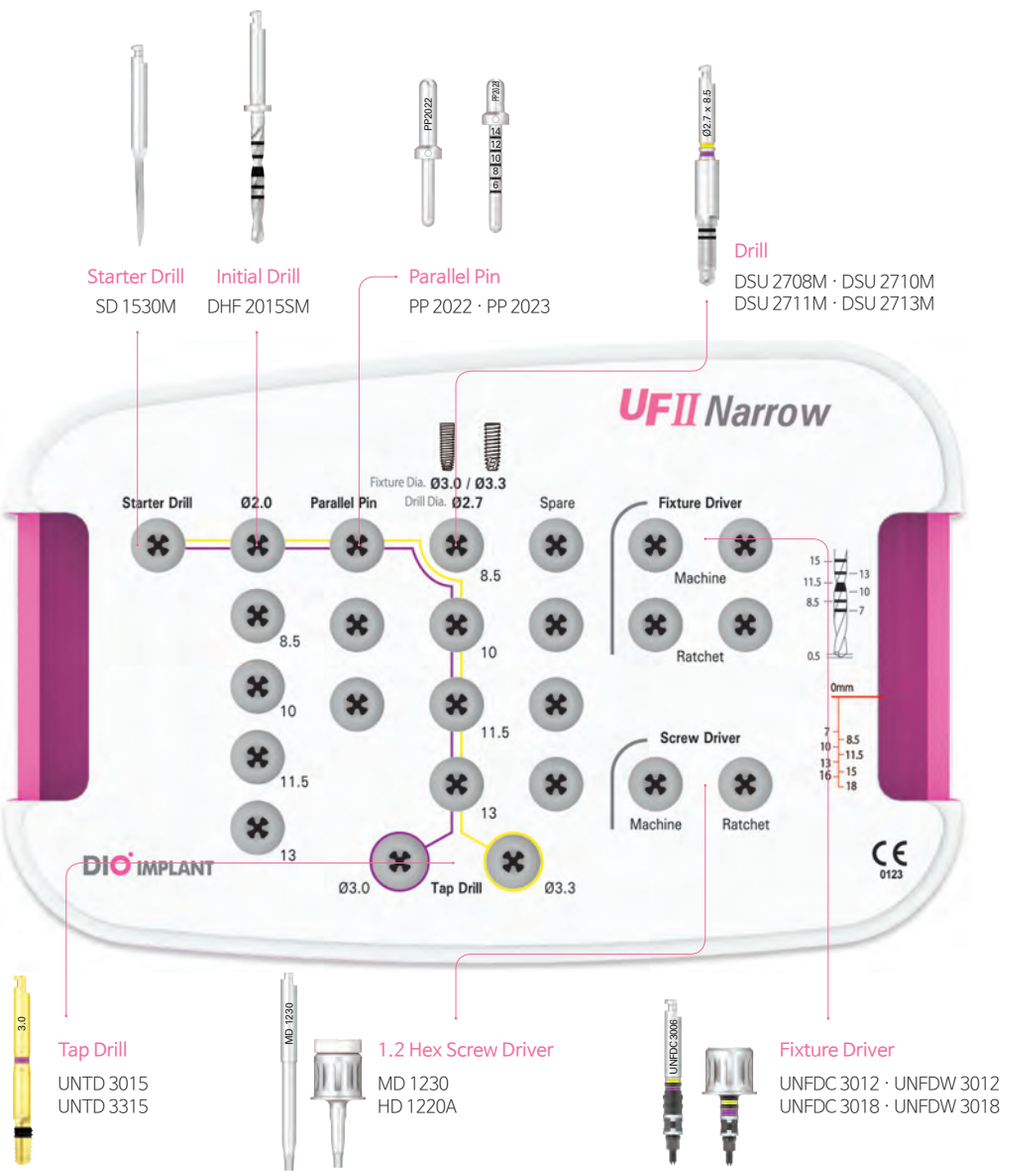

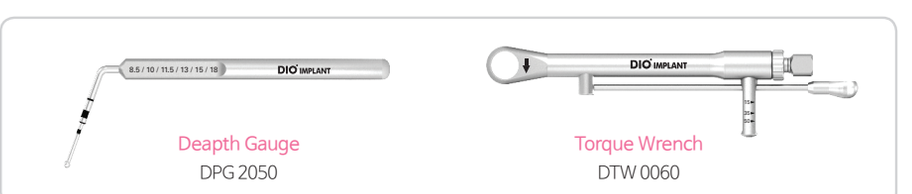

Surgical Tool

Starter Drill

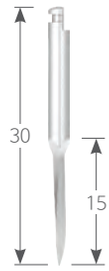

K

Unit mm I Scale 1 : 1.2

Code	SD **1530M**

Initial Drill

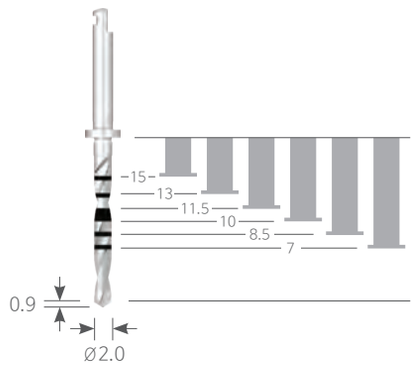

K **D Ø2.0**

Unit mm I Scale 1 : 1.2

Code	DHF **2015SM**

Parallel Pin

K **D Ø2.0**

Unit mm I Scale 1 : 1

Code	PP **2022**	PP **2023**

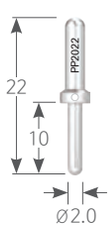

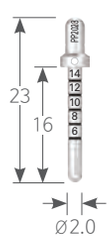

Surgical Tool

Drill

K **D Ø2.7**

Unit mm I Scale 1 : 1

Code	DSU **2708M**	DSU **2710M**	DSU **2711M**	DSU **2713M**

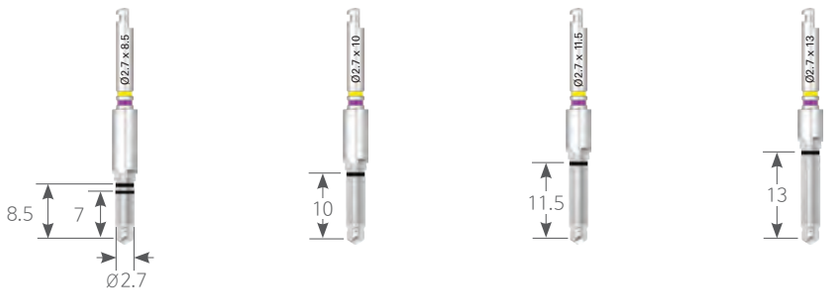

Tap Drill

K

Unit mm I Scale 1 : 1

Fixture Size	Ø**3.0**	Ø**3.3**
Code	UNTD **3015**	UNTD **3315**

Fixture Driver

· Maximum Tightening Torque : 50Ncm
· Drill lifespan : 20 oseotomies

● Sold separately

K

Unit mm I Scale 1 : 1

Type	Machine			Ratchet		
Code	UNFDC **3006**	UNFDC **3012**	UNFDC **3018**	UNFDW **3006**	UNFDC **3012**	UNFDC **3018**

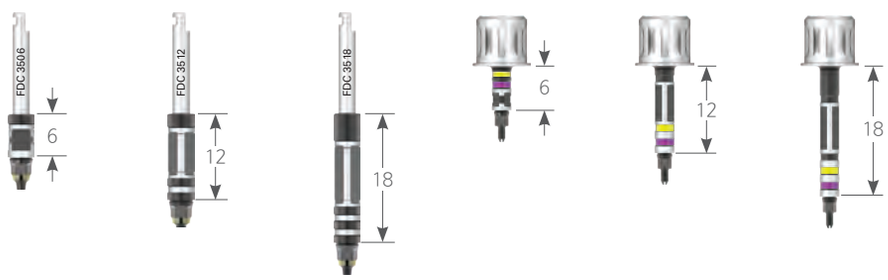

Screw Driver

K Hex 1.2

Unit mm I Scale 1 : 1

Type	Machine	Ratchet
Code	MD **1230**	HD **1220A**

Solid Abutment Driver

· Only use UFII Narrow Kit

● Sold separately

K **D Ø4.0**

Unit mm I Scale 1 : 1

Length	6	12
Code	UNHDS **4006A**	UNHDS **4012A**

Surgical Protocol

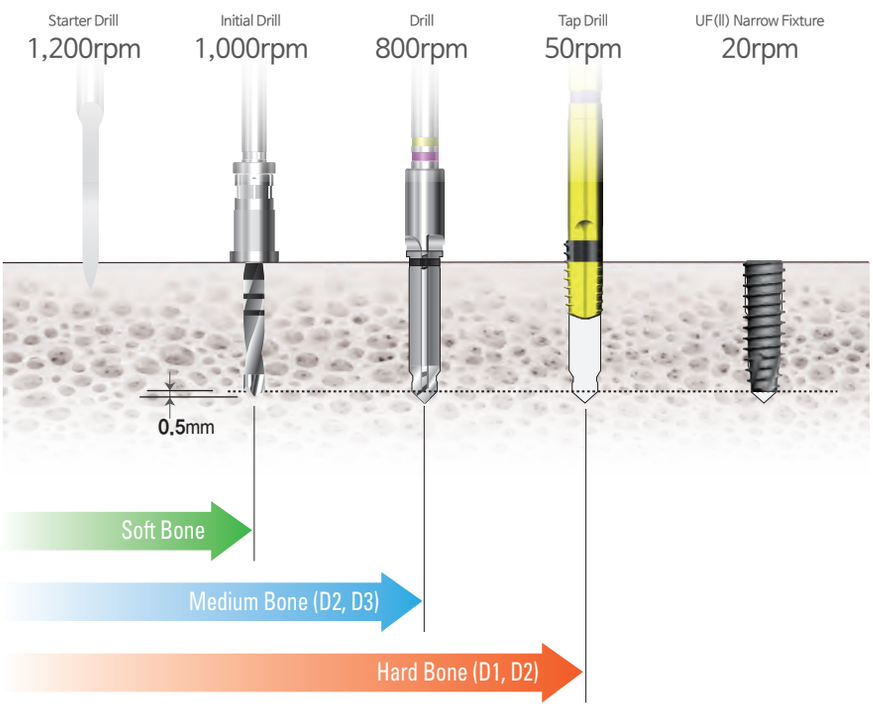

Tap Drill

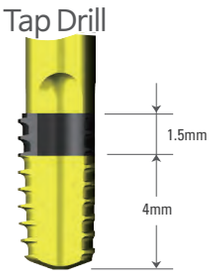

· Tightening torque : 20~40Ncm
Maximum tightening torque : 50Ncm

UFⅡ Wide Kit

Kit Code | UF 09

· Kit composed of drill with outstanding cutting force and durability, etc.
· UFⅡ Wide Ø5.9 Ø6.4 Ø6.9 Fixture

Unit mm | Drill Scale 1 : 0.9

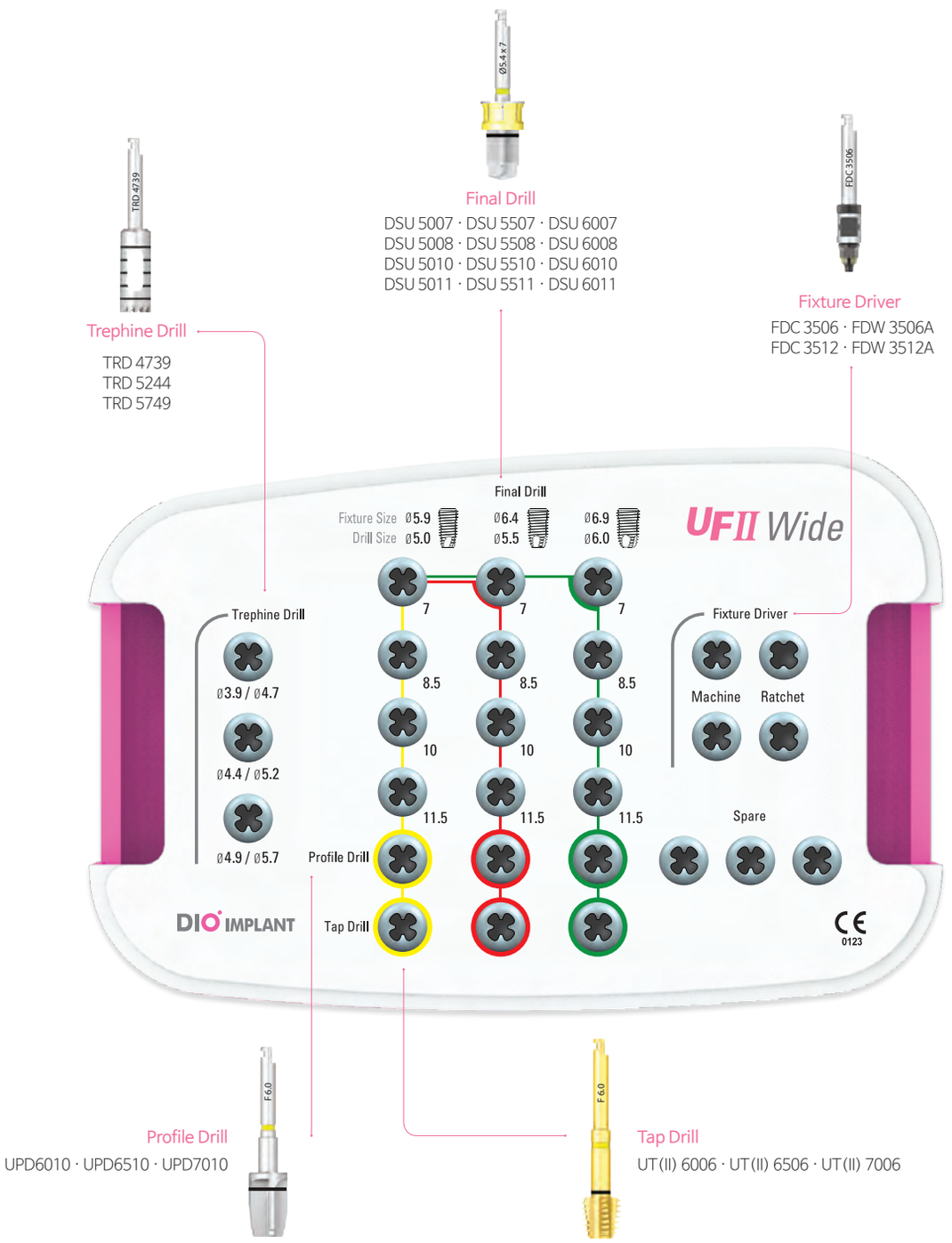

Surgical Tool

Trephine Drill

Scale 1 : 1.15

K

Unit mm I Scale 1 : 1

Code	TRD **4739**	TRD **5244**	TRD **5749**
Diameter 1	Ø3.9	Ø4.4	Ø4.9
Diameter 2	Ø4.7	Ø5.2	Ø5.7

Profile Drill

Scale 1 : 1.15

K

Unit mm I Scale 1 : 1

Fixture Size	Ø**6.0**	Ø**6.5**	Ø**7.0**
Code	UPD **6010**	UPD **6510**	UPD **7010**
Color	●	●	●

Surgical Tool

Final Drill

Scale 1 : 1.15

	Ø5.0	Ø5.5	Ø6.0
Color	●	●	●
Stopper	ST 5504	ST 6004	ST 6504

● Sold separately

K D Ø5.0

Unit mm I Scale 1 : 1

Code	DSU 5007	DSU 5008	DSU 5010	DSU 5011	DSU 5013	DSU 5015
Length	7	8.5	10	11.5	13	15

K D Ø5.5

Code	DSU 5507	DSU 5508	DSU 5510	DSU 5511	DSU 5513	DSU 5515
Length	7	8.5	10	11.5	13	15

K D Ø6.0

Code	DSU 6007	DSU 6008	DSU 6010	DSU 6011	DSU 6013	DSU 6015
Length	7	8.5	10	11.5	13	15

Tap Drill

K

Unit mm I Scale 1 : 1

Fixture Size	Ø6.0	Ø6.5	Ø7.0
Code	UT(II) **6006**	UT(II) **6506**	UT(II) **7006**
Color			

Fixture Driver

● Sold separately

K **D Ø2.7**

Unit mm I Scale 1 : 1

Type	Machine			Ratchet		
Code	FDC **3506**	FDC **3512**	FDC **3518**	FDW **3506A**	FDW **3512A**	FDW **3518A**

Surgical Protocol

Fixture Length 7mm

Extraction Socket &
Replace failed Implant

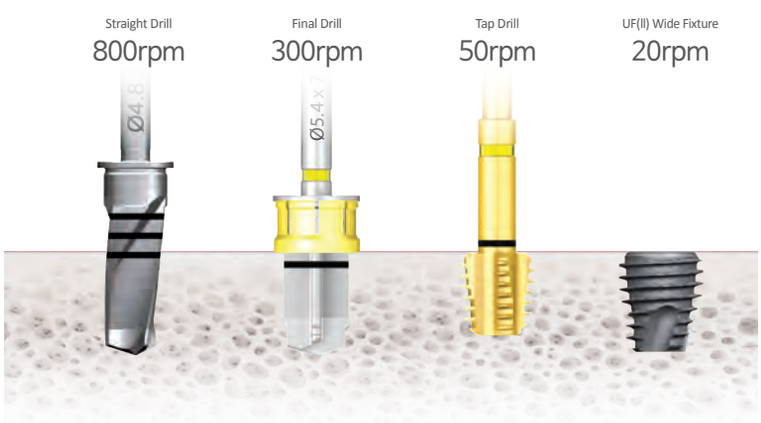

General principles of **surgical tool management**

1/ Because all surgical tools are provided in a non-sterile condition, they must be cleansed and sterilized before use.

Caution

Wrong cleansing and sterilizing process causes corrosion and damage to the tools and if used directly, it may be the cause of 2nd infection.

2/ The recommended number of use of a drill is 20~30 times based on the bone status, and it must be replaced if the blade has been damaged or transformed.

Caution

If damaged drill is used, Heat Necrosis may occur

3/ When managing the surgical tool, one must wear a mask and a glove to prevent infection.

Before sterilization

1/ To prevent contaminants such as blood, tissue cell or bone residue from attaching to the surface of the instruments, the instruments must be immersed in an antiseptic solution right after use.

2/ When using antiseptic solution, to prevent corrosion or bronzing, one must follow directions given by the manufacturer of the concentration of the antiseptic and the duration of the instrument immersion in the antiseptic.

Check

Concentration : completely liquefy the concentrate before placing the instruments in the antiseptic solution.
Immersion Duration : The instruments must not be immersed more than a day

3/ The instruments must be fully immersed in the antiseptic solution.

4/ For a decrease in sterilizing power and to prevent corrosion, the antiseptic solution must be replaced every day.

Before rinse

To prevent protein from clotting in 45 degrees temperature Celsius, the instruments must be rinsed in running cold water.

Caution

Cleanse the instruments right after preliminary rinse

1 Sterilization

1/ Must only use antiseptic solution that is FDA and CE approved, and you must follow the manufacturer's directions

2/ When cleansing metal instruments, corrosion free antiseptic solution and cleansing product use is recommended.

3/ For safety, one must always wear personal protection gear such as gloves, glasses, and masks.

4/ The user has an obligation to be responsible for the sterilization and management of the instrument.

5/ Restriction and limitation of the instrument reuse:

· With repetition of cleansing, the life expectancy of all instruments will decrease. If the instruments show corrosion, transformation or discoloring of the marking area, it means that they have exceeded the safety criteria that is required for use.

· Product with a disposable mark cannot be reused.

· Tungsten carbide burs, plastic composition and NiTi instruments can be damaged with hydrogen peroxide, and aluminum material instruments can be damaged by caustic soda solution.

· Acid solution (pH < 6) and alkaline solution (pH > 8) must not be used.

Caution

After use, if the contaminants such as residual bone or blood stain are not completely removed, it may lead to corrosion; therefore all separable instruments must all be disassembled before the cleansing process.

2 Cleanse / Dry

1/ Contaminants must be completely removed using a soft brush.
Do not use a wire brush or stainless material brush, and do not put too much pressure.

2/ Immerse the products in the antiseptic solution of their characteristics and clean with an ultrasonic cleaner.
However, do not cleanse the different materials together. Also, when immersing the instruments in the ultrasonic cleaner, make sure that the instruments do not touch each other.

3/ Make sure that debris is not seen with the naked eye.

- **Products that are fractured or transformed must be discarded.**
- **One should follow the recommendations for the level of concentration or the length of time provided by the manufacturer.**
- **The antiseptic solution must not include aldehyde, di- or tri-ethanolamines component to control the corrosion.**

4/ After cleaning, the products must be rinsed with distilled water or deionized water for at least a minute.
If the antiseptic solution contains corrosion inhibitor, rinsing before placing in the sterilizer is recommended.

5/ To prevent corrosion or water stain on the instruments, completely dry with a dryer or filtered compressed air

6/ To prevent corrosion, decrease in sterilizing power, and contamination, antiseptic must be supplemented every day.

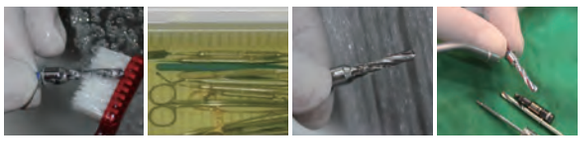

Caution

If the instruments are not properly rinsed, residue is left behind, or is not properly dried, the sterilization process might discolor or corrode the instruments, and therefore the whole process must be gone through again.

Caution

Corrosion may start if debris such as blood stain or bone residue is not completely removed. They must be cleansed right after use and the debris must be completely removed when cleaning.

Check

Check on the instruments for faults (fracture, transformation, or corrosion).
If necessary, assemble the instruments.
Contaminated instruments must be cleansed or disinfected. Transformations that may affect the safety, performance or tolerance of the instruments; in other words; bent, damaged (fractured, corroded), or faulty products (discoloration of marking area, Loss) must be destroyed.

3 Packaging

1/ Check on the dry status of the instruments and pack in the sterilized wrapping paper.

2/ On the sterilized wrapping paper, attach a direction tape to check the date of sterilization. Check on the expiration date on the sterilized wrapping paper. Wrapping paper must be able to withstand up to 141 degrees that coincides with the EN ISO 11607.

4 Pasteurization

1/ Pasteurization process must follow the sterilizer equipment manufacturer. **※ 4~ 18 minutes in 134'C for autoclave sterilization.**

2/ Instruments and plastic components must be sterilized based on their packaging label.
- Sterilizer must coincide with the requirements of EN 13060 and EN285.
- Sterilization process must regard the ISO 11607.
- One must follow the sterilization process and maintenance process of the sterilizer provided by the manufacturer.
- Efficiency management (Proper packaging, no humidity, change in color of the sterilization dashboard)

Caution

- **The products must not touch the inner part of the sterilization equipment, and the sterilization degree must be lower than 150℃**
- **The products that were not properly cleansed or dried may generate corrosion. If they were not cleansed, not properly dried or corroded, separate them from the rest or remove the faults. (Do not sterilize the corroded instruments with the noncorroded products together)**
- **For sterilization, use only salt-free water or distilled water for the solution. (Do not use tap water)**
- **Check if the instruments are fully dried, and do not leave them in a place with high moisture.**

5 Storage

Instruments must be stored in a sterilized container in a dry and clean environment. If the packaging is opened or damaged, we cannot guarantee the instruments' sterilization status.

DIO IMPLANT

www.dioimplant.com